JACKSCREW LINE STOP MACHINE

48” Travel – 3” 150# to 12” 150# and 3” 600# to 6” 600#
52” Travel – 3” 150# to 12” 150# and 3” 600# to 8” 600#
72” Travel – 3” 150# to 12” 150# and 3” 600# to 12” 600#

PRESSURE/TEMPERATURE LIMITS WITH PACKING GLAND
48”----------1000 psi
52”---------- 900 psi
72”---------- 500 psi

Maximum Operating Temperature
48” and 52”---------- -20 to 700°F @ 700 psi
72” ---------- - -20 to 700°F @ 500 psi
Control Bar Travel --- Approximately 6 turns to the inch
Machine Drive -------- 1” Female square or 13/16” socket
Control Bar Diameter – 2”
***Using an o-ring gland, the temperature rating is 180°F**

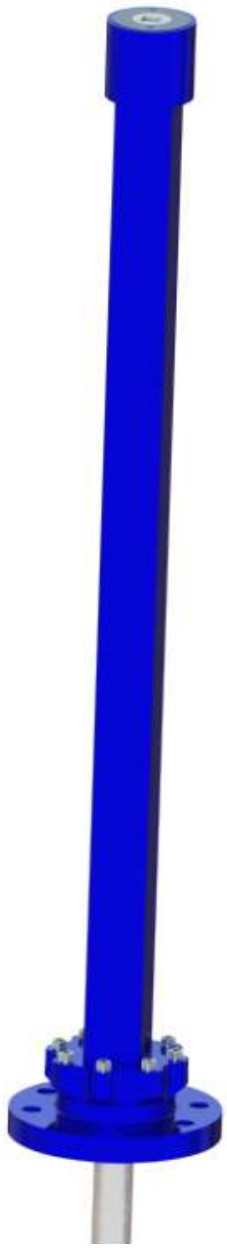

Function	Rating/Operating Dimensions
Maximum Operating Pressure	48” 1000 PSI @ 100°F 52” 900 PSI @ 100°F 72” 500 PSI @ 100°F
Maximum Operating Temperature	48” and 52” -20°F to 700°F @ 700 PSI 72” -20°F to 700°F @ 500 PSI
Maximum Test Pressure	1000 PSI with 600# Flange
Maximum Bar Travel	48”, 52” 72”
Normal Line Stop Range	150# & 600#
Size Range	3” – 12”
Attaching Flange	
O-ring	Smooth Face
RTJ	4” 600#
Attaching Flange Bolt Size	
O-ring	½”- 13 x 3-1/2”
RTJ	
Flat Faced RTJ Flange	⅞”-9 x 3”
Raced Face RTJ Flange	⅞”-9 x 3-1/2”
RTJ Gasket Size	R 37
O-Ring Size	#427 (5.276” OD x 4.725” ID 0.275” Cross Section) #348 (4.770” OD x 4.350” ID 0.210” Cross Section) #344 (4.270” OD x 3.850” ID 0.210” Cross Section)
Control Bar Diameter	2”
Control Bar Bolt Size	⅜” x 3” Shoulder Bolt
Control Bar Bolt Nut Size	5/16”- 18
Bar Lock Wrench Size	⅜” Hex Key
Weight With Out Housing	70LBS, 85 LBS, 95 LBS

NOTE: EQUIPMENT AVAILABILITY MUST BE VERIFIED BEFORE THE START OF THE JOB.
NOTE: ALL WEIGHTS AND DIMENSIONS ARE BASED ON AVAILABLE DATA AND SUBJECT TO CHANGE.

All dimensions are for plant series fittings.

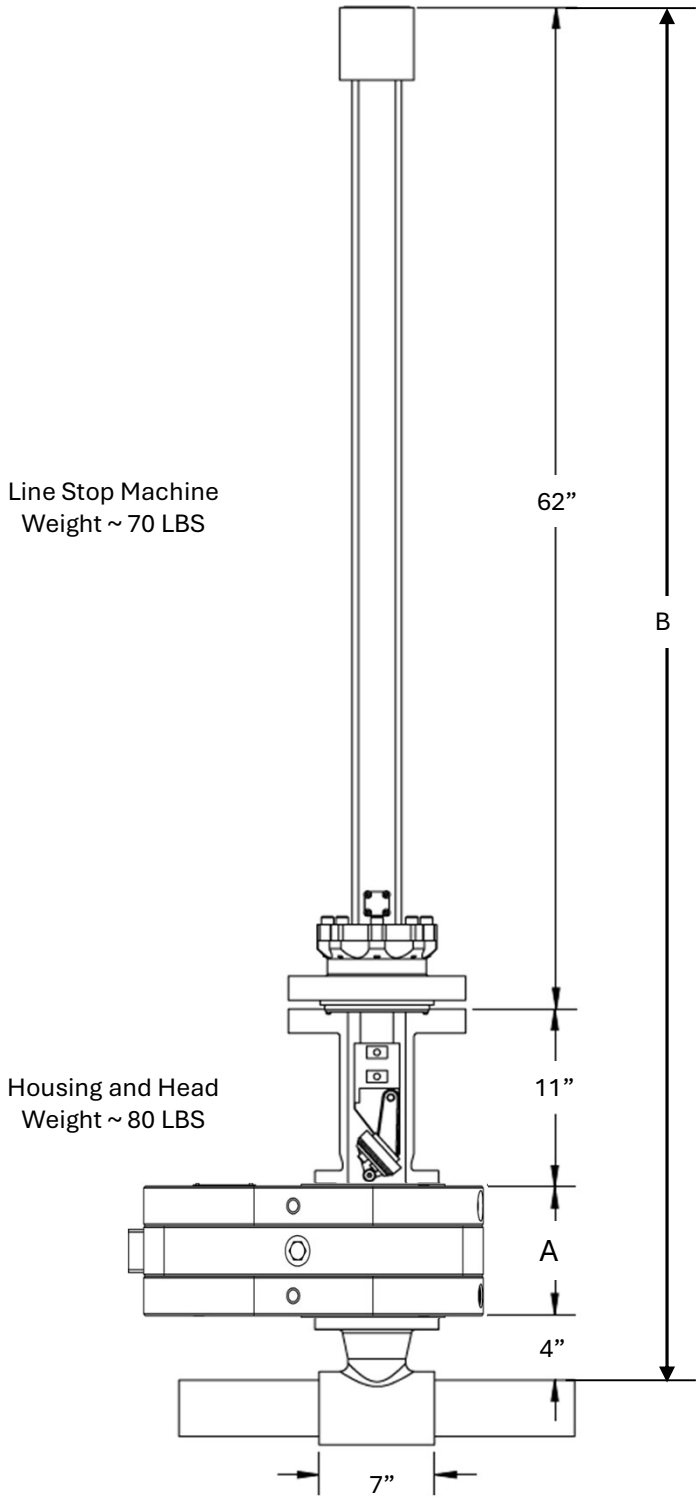

Valve Type	A	B	Weight
Sandwich Type	4.625”	81.625”	50#

3” 150# Line Stop 48” Jackscrew

NOTE: EQUIPMENT AVAILABILITY MUST BE VERIFIED BEFORE THE START OF THE JOB.
NOTE: ALL WEIGHTS AND DIMENSIONS ARE BASED ON AVAILABLE DATA AND SUBJECT TO CHANGE.

All dimensions are for plant series fittings.

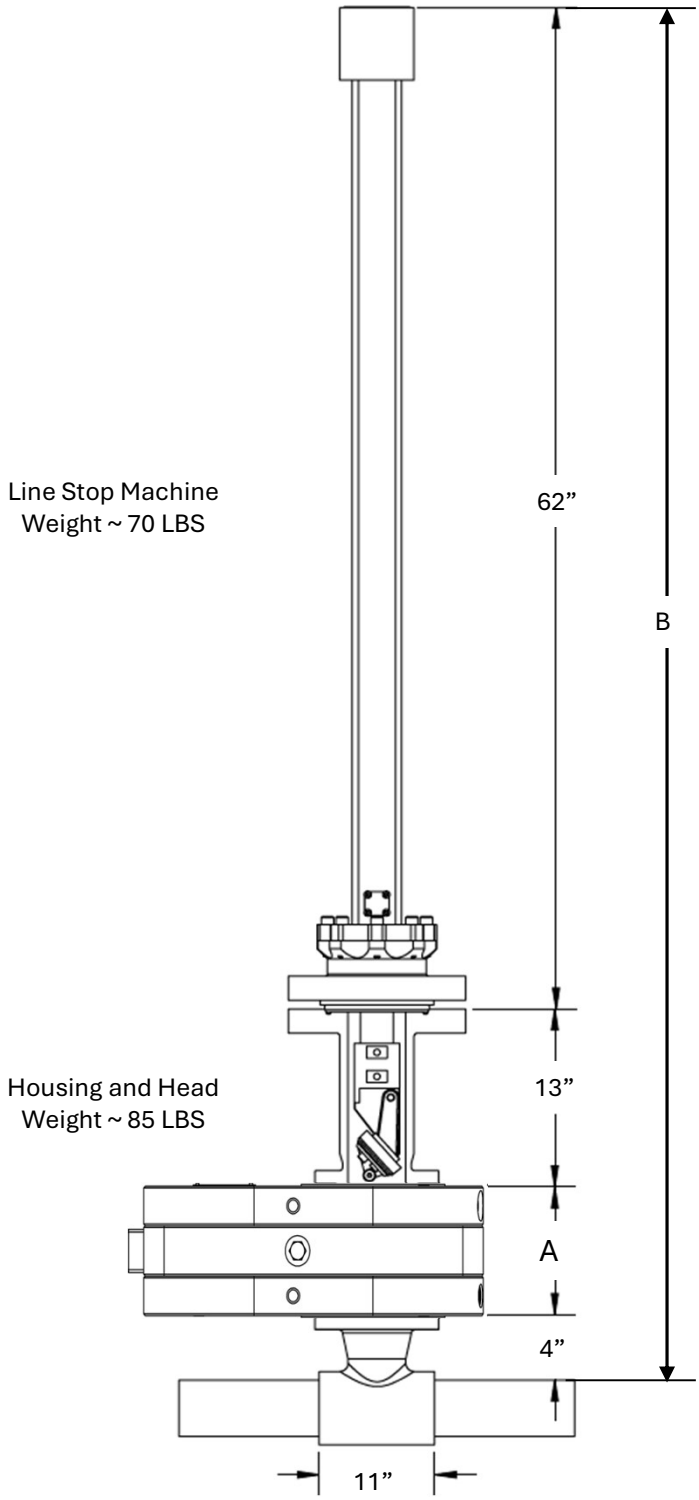

Valve Type	A	B	Weight
Sandwich Type	5.250”	84.25”	78#

4” 150# Line Stop 48” Jackscrew

NOTE: EQUIPMENT AVAILABILITY MUST BE VERIFIED BEFORE THE START OF THE JOB.
NOTE: ALL WEIGHTS AND DIMENSIONS ARE BASED ON AVAILABLE DATA AND SUBJECT TO CHANGE.

All dimensions are for plant series fittings.

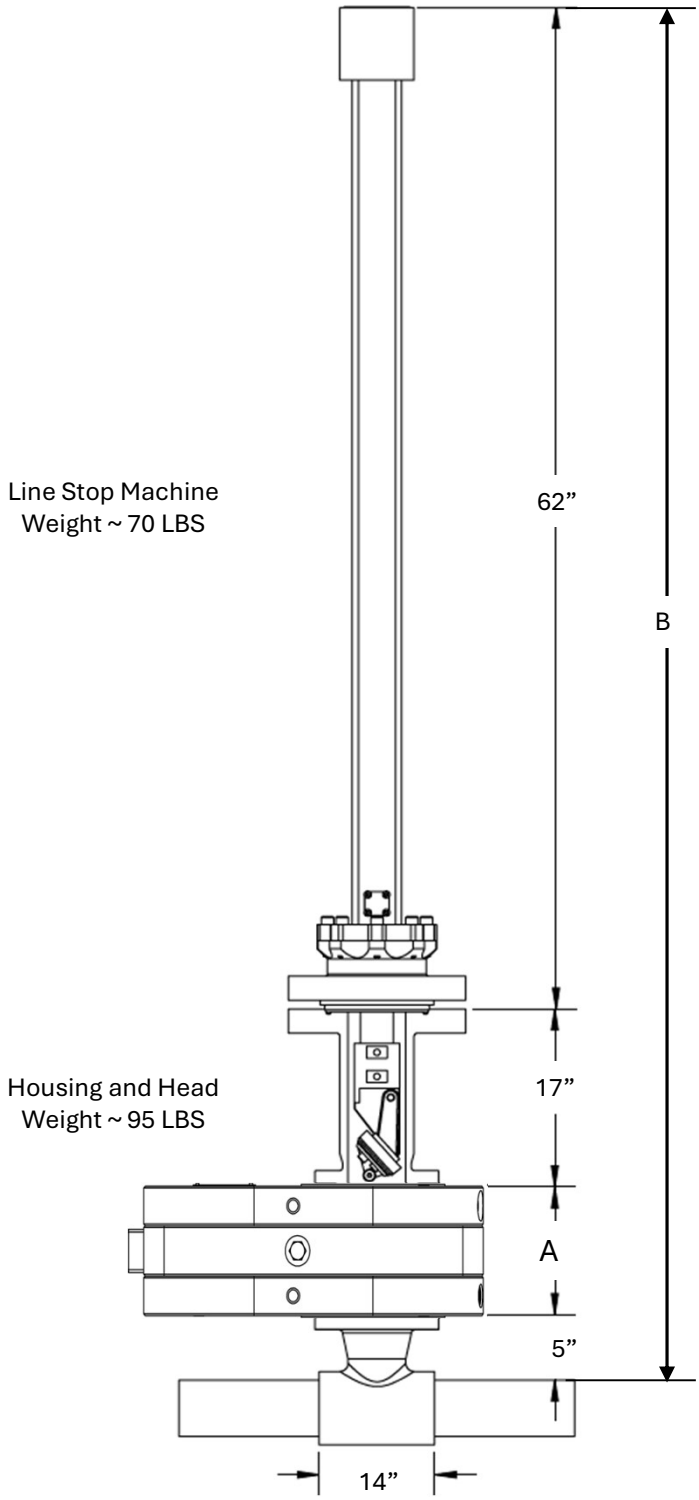

Valve Type	A	B	Weight
Sandwich Type	5.5”	89.5”	142#

6” 150# Line Stop 48” Jackscrew

NOTE: EQUIPMENT AVAILABILITY MUST BE VERIFIED BEFORE THE START OF THE JOB.
NOTE: ALL WEIGHTS AND DIMENSIONS ARE BASED ON AVAILABLE DATA AND SUBJECT TO CHANGE.

All dimensions are for plant series fittings.

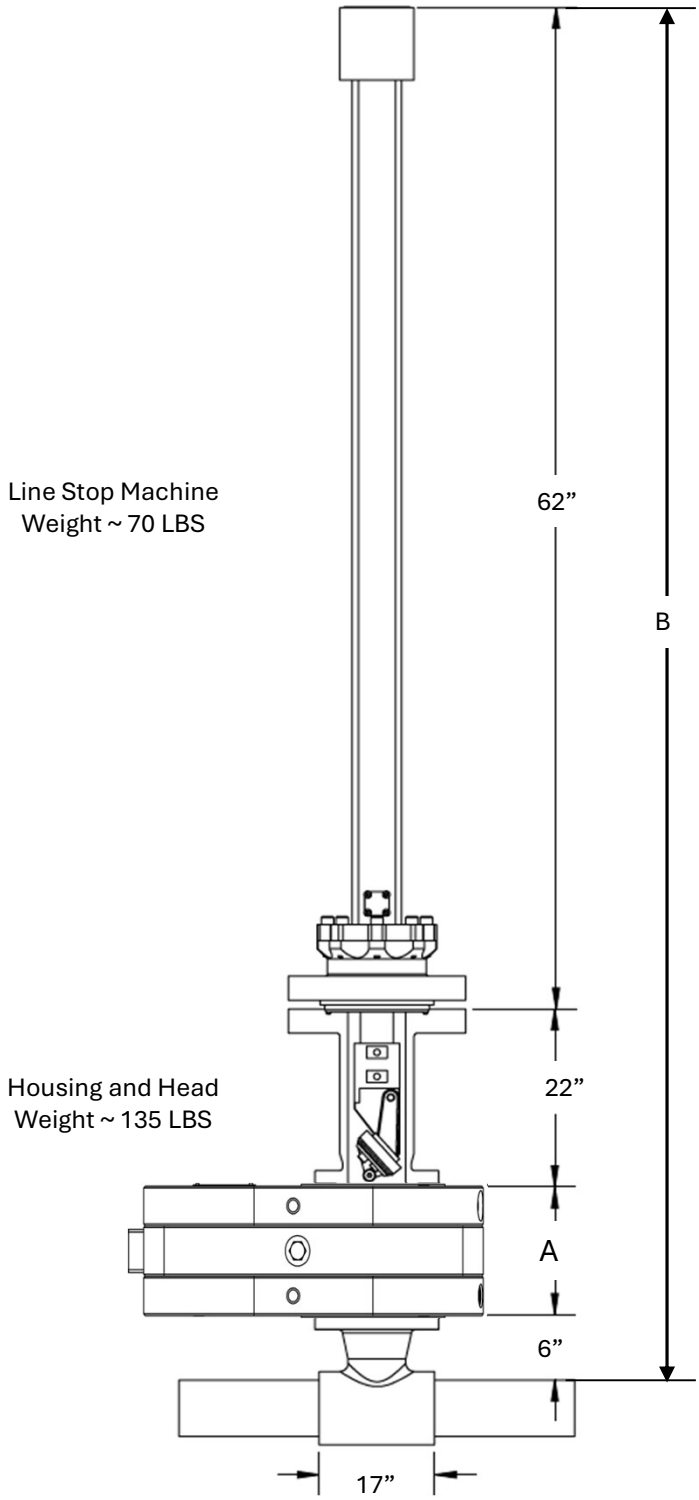

Valve Type	A	B	Weight
Sandwich Type	5.750”	95.75”	207#

8” 150# Line Stop 48” Jackscrew

NOTE: EQUIPMENT AVAILABILITY MUST BE VERIFIED BEFORE THE START OF THE JOB.
NOTE: ALL WEIGHTS AND DIMENSIONS ARE BASED ON AVAILABLE DATA AND SUBJECT TO CHANGE.

All dimensions are for plant series fittings.

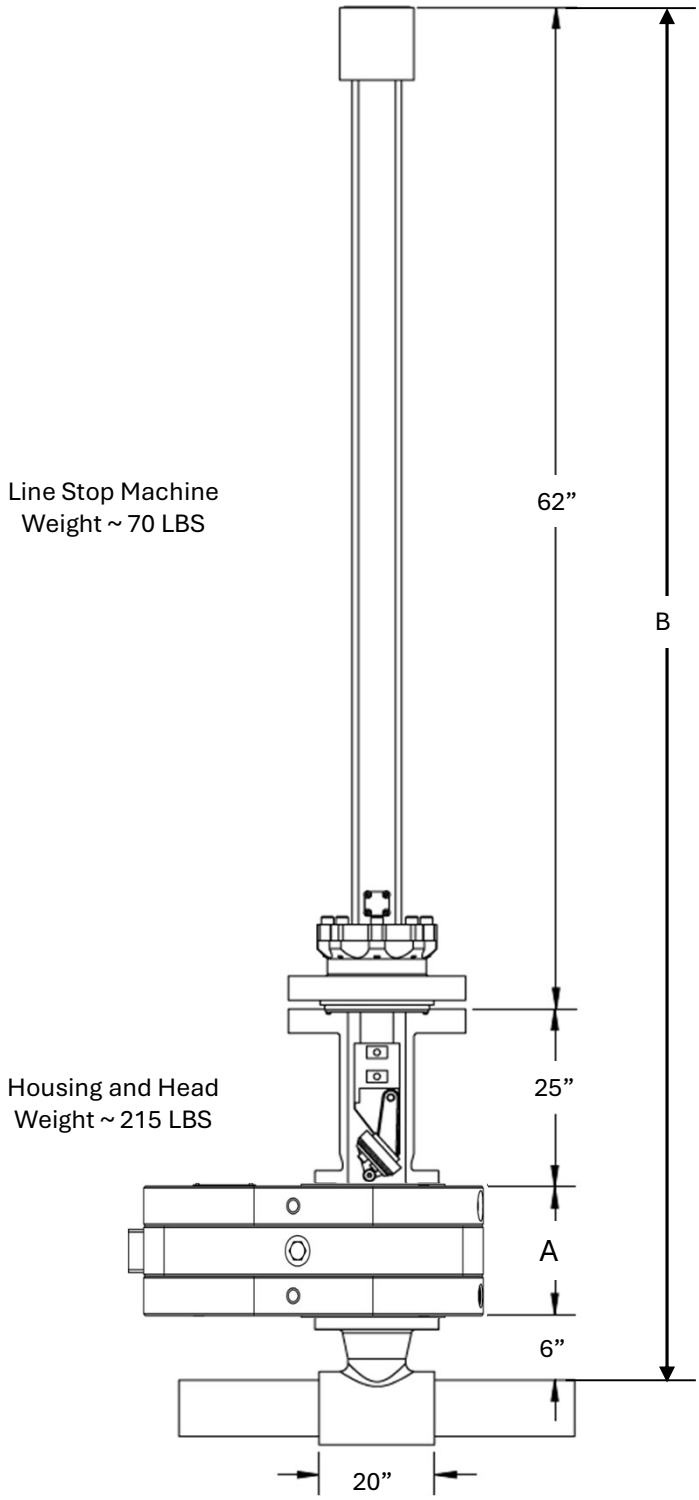

Valve Type	A	B	Weight
Sandwich Type	6”	99”	330#

10” 150# Line Stop 48” Jackscrew

NOTE: EQUIPMENT AVAILABILITY MUST BE VERIFIED BEFORE THE START OF THE JOB.
NOTE: ALL WEIGHTS AND DIMENSIONS ARE BASED ON AVAILABLE DATA AND SUBJECT TO CHANGE.

All dimensions are for plant series fittings.

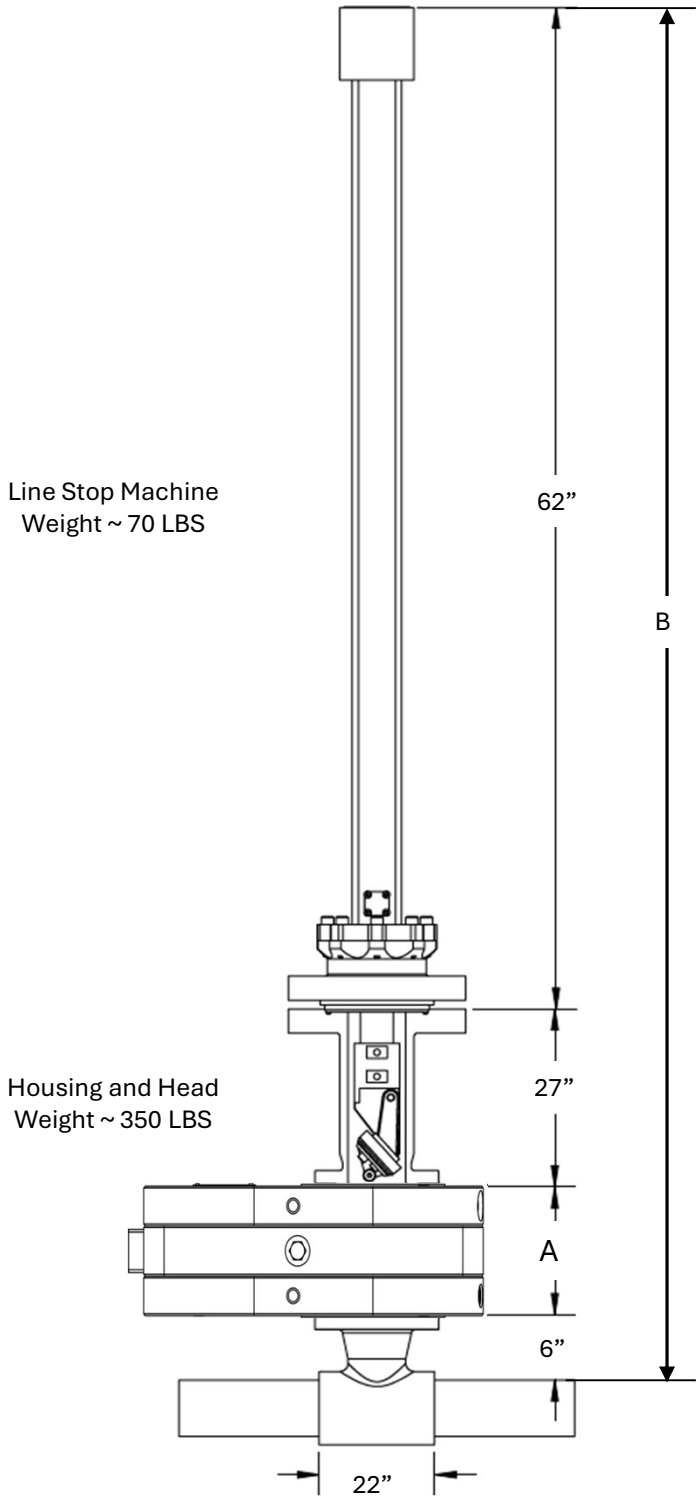

Valve Type	A	B	Weight
Sandwich Type	6”	101”	78#

12” 150# Line Stop 48” Jackscrew

NOTE: EQUIPMENT AVAILABILITY MUST BE VERIFIED BEFORE THE START OF THE JOB.
NOTE: ALL WEIGHTS AND DIMENSIONS ARE BASED ON AVAILABLE DATA AND SUBJECT TO CHANGE.

All dimensions are for plant series fittings.

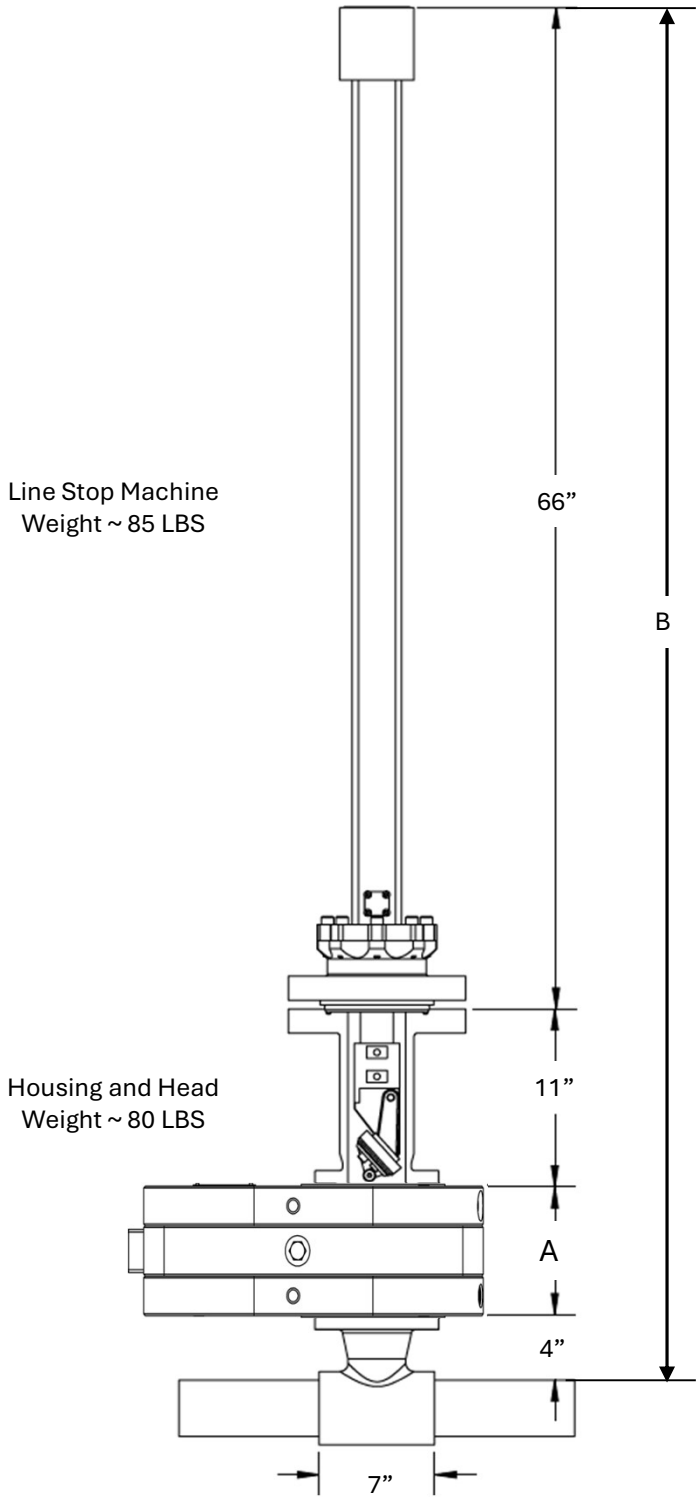

Valve Type	A	B	Weight
Sandwich Type	4.625”	85.625”	50#

3” 150# Line Stop 52” Jackscrew

NOTE: EQUIPMENT AVAILABILITY MUST BE VERIFIED BEFORE THE START OF THE JOB.
NOTE: ALL WEIGHTS AND DIMENSIONS ARE BASED ON AVAILABLE DATA AND SUBJECT TO CHANGE.

All dimensions are for plant series fittings.

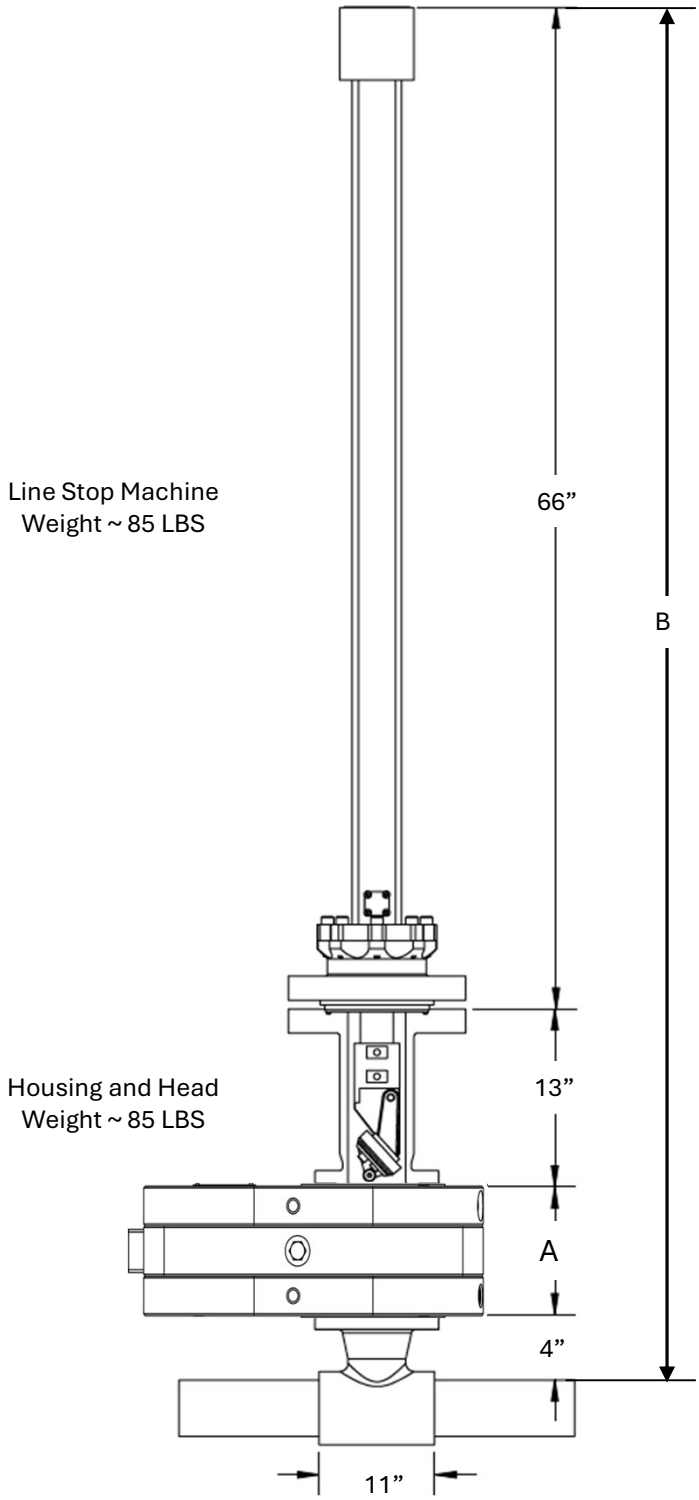

Valve Type	A	B	Weight
Sandwich Type	5.250”	88.25”	78#

4” 150# Line Stop 52” Jackscrew

NOTE: EQUIPMENT AVAILABILITY MUST BE VERIFIED BEFORE THE START OF THE JOB.
NOTE: ALL WEIGHTS AND DIMENSIONS ARE BASED ON AVAILABLE DATA AND SUBJECT TO CHANGE.

All dimensions are for plant series fittings.

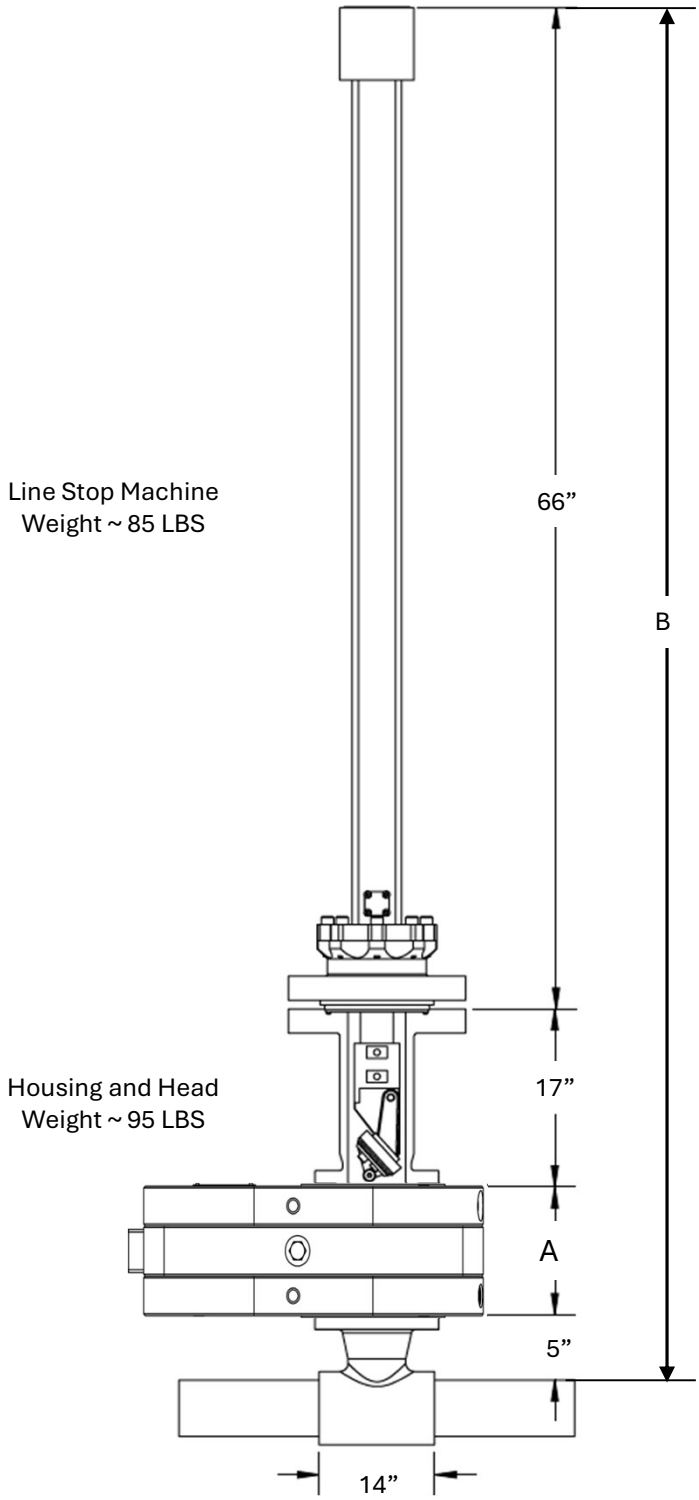

Valve Type	A	B	Weight
Sandwich Type	5.5”	93.5”	142#

6” 150# Line Stop 52” Jackscrew

NOTE: EQUIPMENT AVAILABILITY MUST BE VERIFIED BEFORE THE START OF THE JOB.
NOTE: ALL WEIGHTS AND DIMENSIONS ARE BASED ON AVAILABLE DATA AND SUBJECT TO CHANGE.

All dimensions are for plant series fittings.

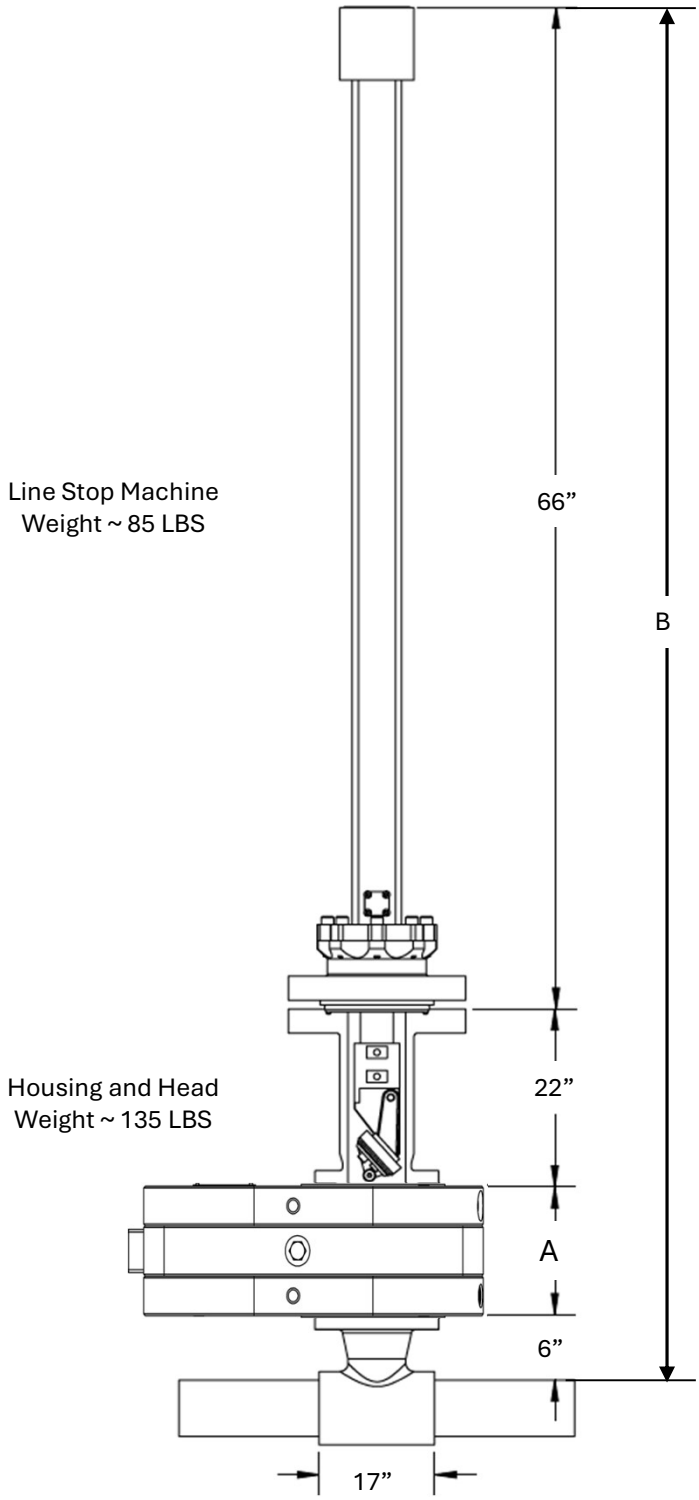

Valve Type	A	B	Weight
Sandwich Type	5.750”	99.75”	207#

8” 150# Line Stop 52” Jackscrew

NOTE: EQUIPMENT AVAILABILITY MUST BE VERIFIED BEFORE THE START OF THE JOB.
NOTE: ALL WEIGHTS AND DIMENSIONS ARE BASED ON AVAILABLE DATA AND SUBJECT TO CHANGE.

All dimensions are for plant series fittings.

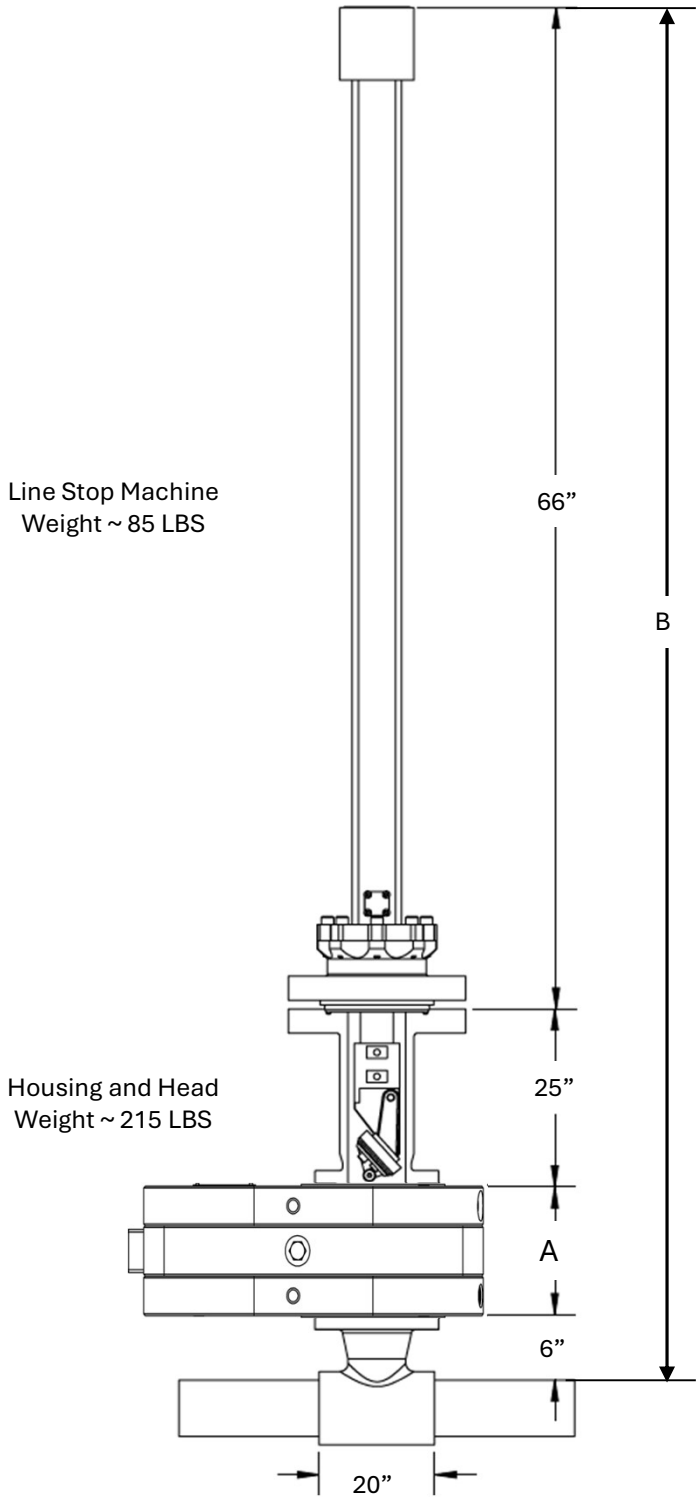

Valve Type	A	B	Weight
Sandwich Type	6”	103”	330#

10” 150# Line Stop 52” Jackscrew

NOTE: EQUIPMENT AVAILABILITY MUST BE VERIFIED BEFORE THE START OF THE JOB.
NOTE: ALL WEIGHTS AND DIMENSIONS ARE BASED ON AVAILABLE DATA AND SUBJECT TO CHANGE.

All dimensions are for plant series fittings.

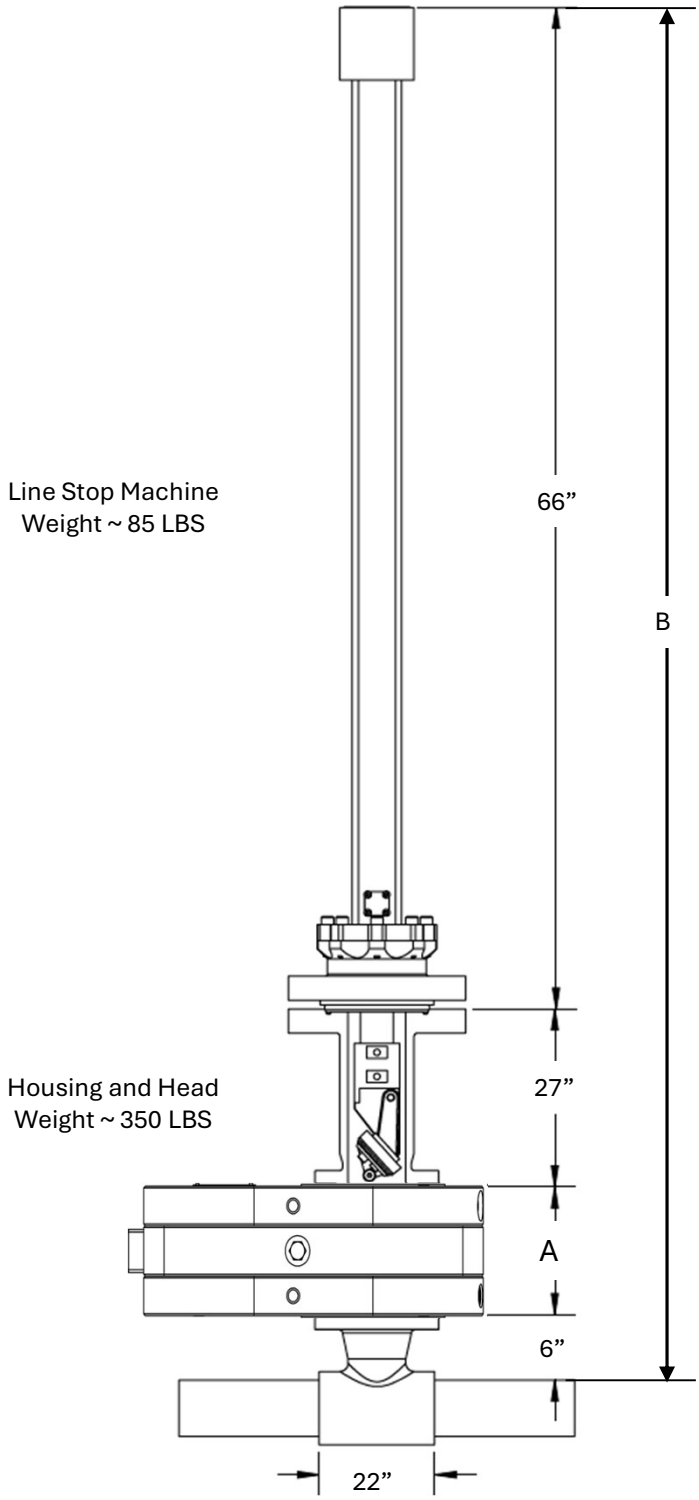

Valve Type	A	B	Weight
Sandwich Type	6”	105”	78#

12” 150# Line Stop 52” Jackscrew

NOTE: EQUIPMENT AVAILABILITY MUST BE VERIFIED BEFORE THE START OF THE JOB.
NOTE: ALL WEIGHTS AND DIMENSIONS ARE BASED ON AVAILABLE DATA AND SUBJECT TO CHANGE.

All dimensions are for plant series fittings.

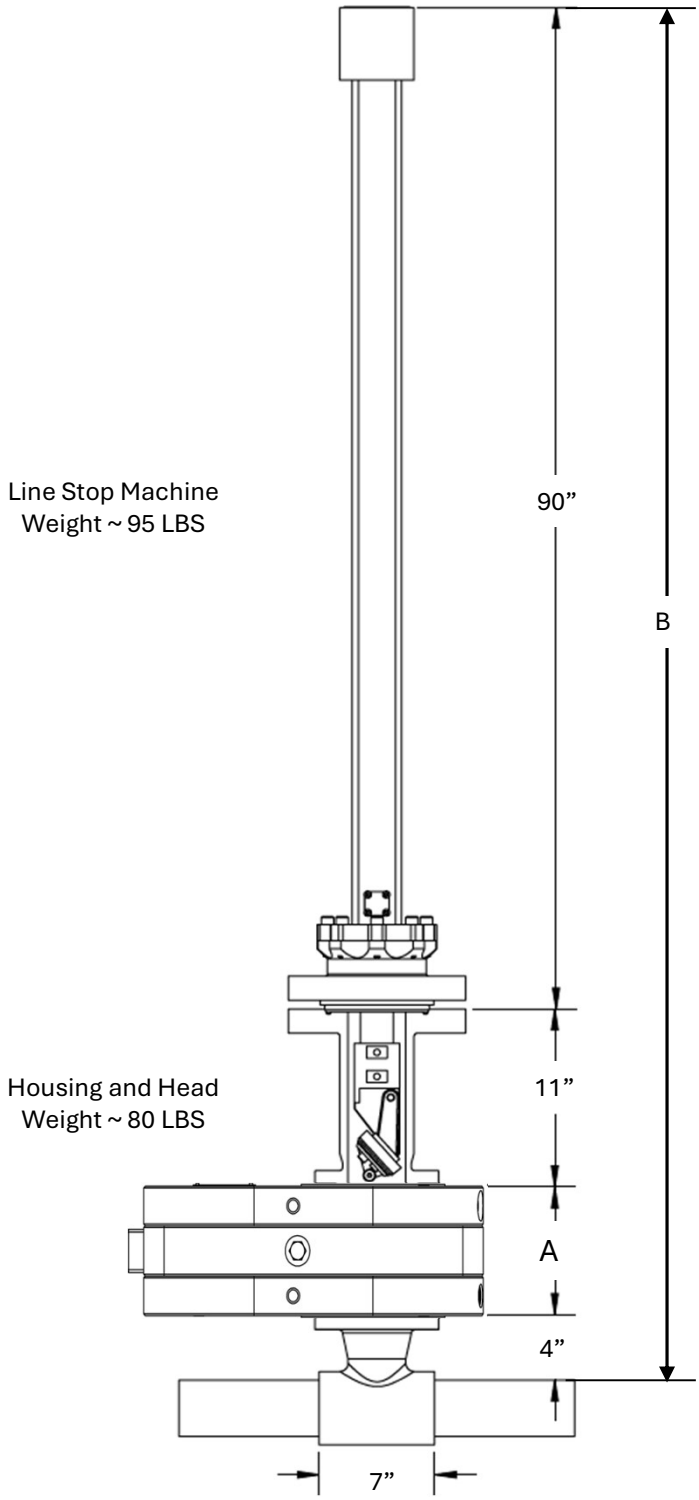

Valve Type	A	B	Weight
Sandwich Type	4.625”	109.625”	50#

3” 150# Line Stop 72” Jackscrew

NOTE: EQUIPMENT AVAILABILITY MUST BE VERIFIED BEFORE THE START OF THE JOB.
NOTE: ALL WEIGHTS AND DIMENSIONS ARE BASED ON AVAILABLE DATA AND SUBJECT TO CHANGE.

All dimensions are for plant series fittings.

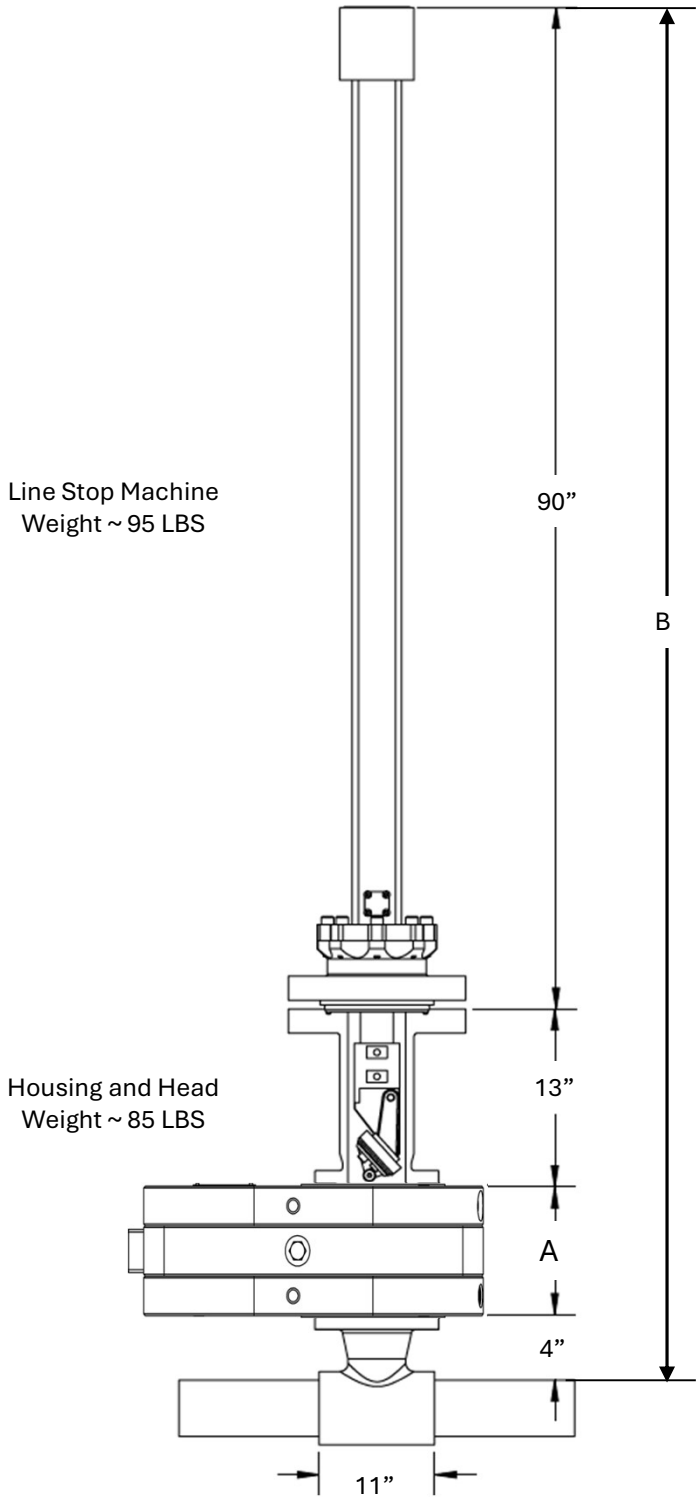

Valve Type	A	B	Weight
Sandwich Type	5.250”	112.25”	78#

4” 150# Line Stop 72” Jackscrew

NOTE: EQUIPMENT AVAILABILITY MUST BE VERIFIED BEFORE THE START OF THE JOB.
NOTE: ALL WEIGHTS AND DIMENSIONS ARE BASED ON AVAILABLE DATA AND SUBJECT TO CHANGE.

All dimensions are for plant series fittings.

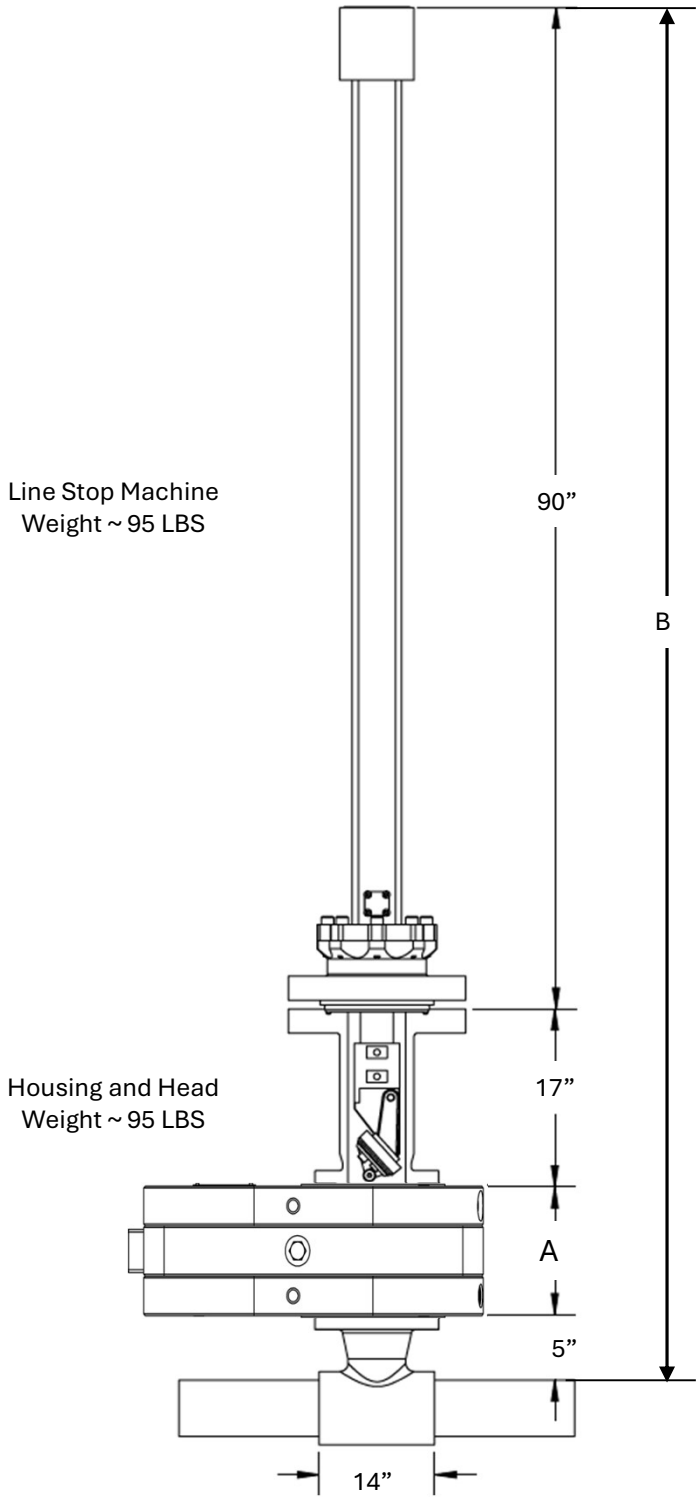

Valve Type	A	B	Weight
Sandwich Type	5.5”	117.5”	142#

6” 150# Line Stop 72” Jackscrew

NOTE: EQUIPMENT AVAILABILITY MUST BE VERIFIED BEFORE THE START OF THE JOB.
NOTE: ALL WEIGHTS AND DIMENSIONS ARE BASED ON AVAILABLE DATA AND SUBJECT TO CHANGE.

All dimensions are for plant series fittings.

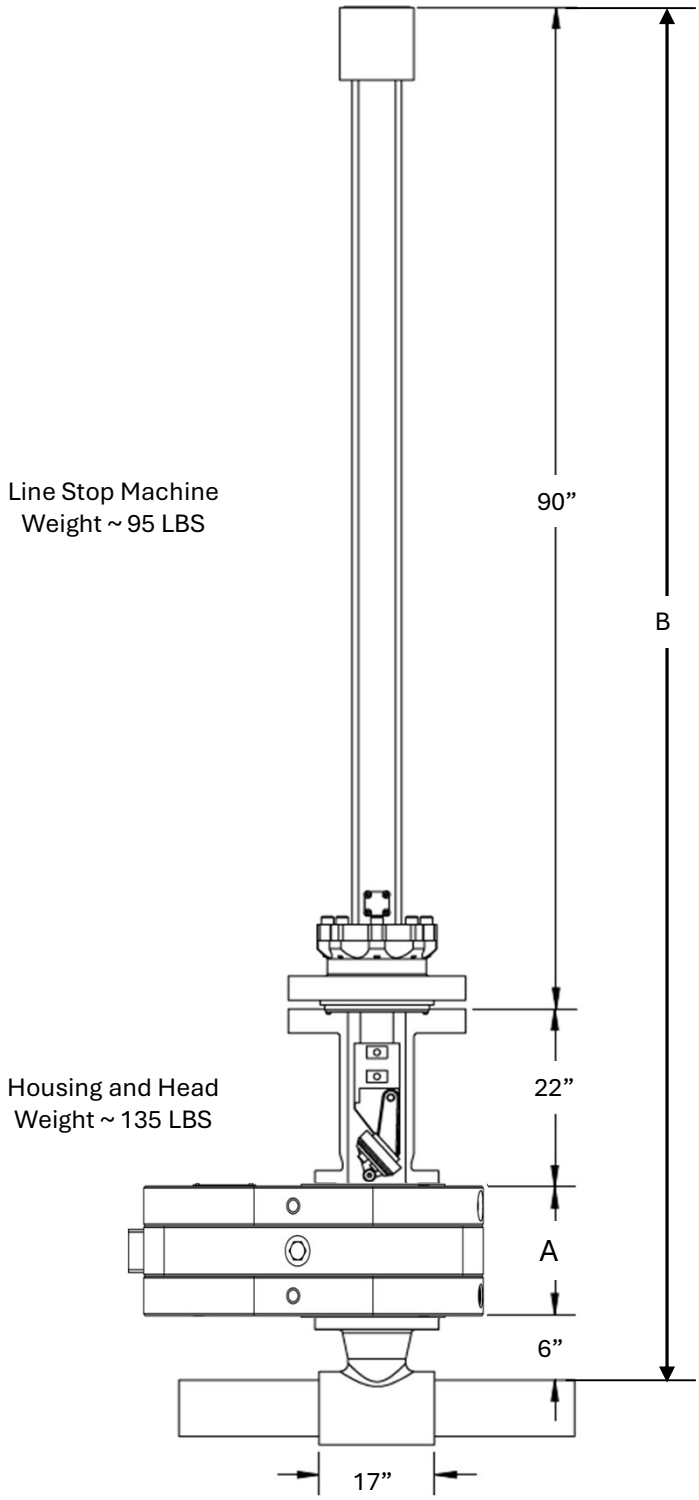

Valve Type	A	B	Weight
Sandwich Type	5.750”	123.75”	207#

8” 150# Line Stop 72” Jackscrew

NOTE: EQUIPMENT AVAILABILITY MUST BE VERIFIED BEFORE THE START OF THE JOB.
NOTE: ALL WEIGHTS AND DIMENSIONS ARE BASED ON AVAILABLE DATA AND SUBJECT TO CHANGE.

All dimensions are for plant series fittings.

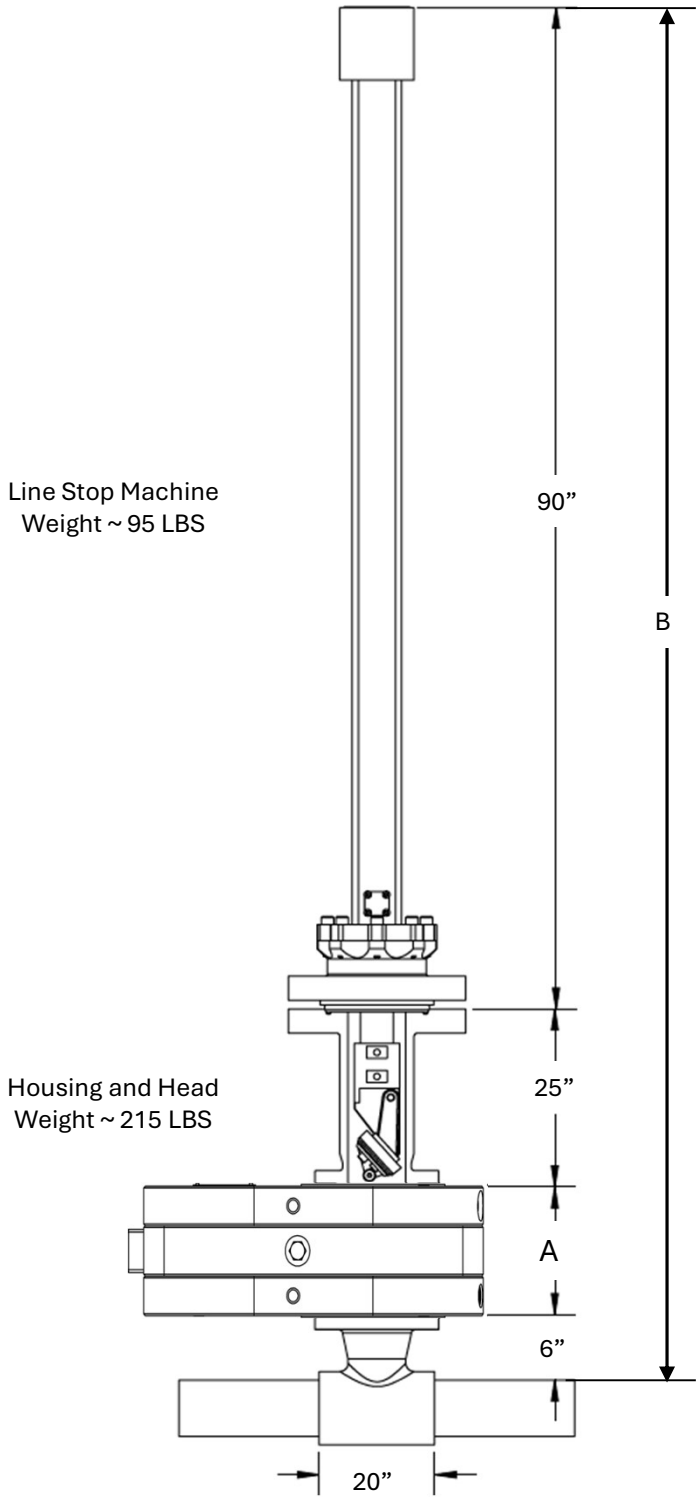

Valve Type	A	B	Weight
Sandwich Type	6”	127”	330#

10” 150# Line Stop 72” Jackscrew

NOTE: EQUIPMENT AVAILABILITY MUST BE VERIFIED BEFORE THE START OF THE JOB.
NOTE: ALL WEIGHTS AND DIMENSIONS ARE BASED ON AVAILABLE DATA AND SUBJECT TO CHANGE.

All dimensions are for plant series fittings.

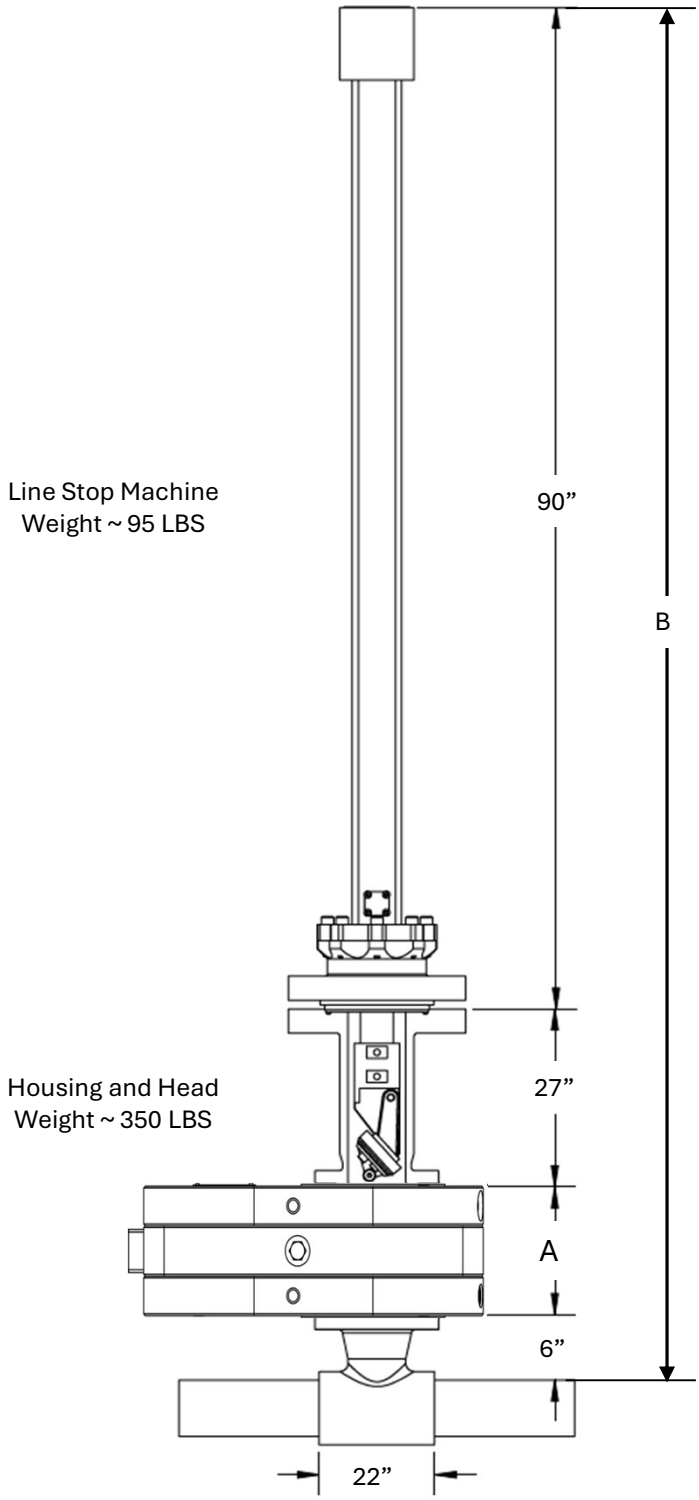

Valve Type	A	B	Weight
Sandwich Type	6”	129”	78#

12” 150# Line Stop 72” Jackscrew

NOTE: EQUIPMENT AVAILABILITY MUST BE VERIFIED BEFORE THE START OF THE JOB.
NOTE: ALL WEIGHTS AND DIMENSIONS ARE BASED ON AVAILABLE DATA AND SUBJECT TO CHANGE.

All dimensions are for plant series fittings.

This stack utilizes 4” line stop equipment and a 3” 600# x 4” 600# spool below the valve. The A dimension includes the spool length.

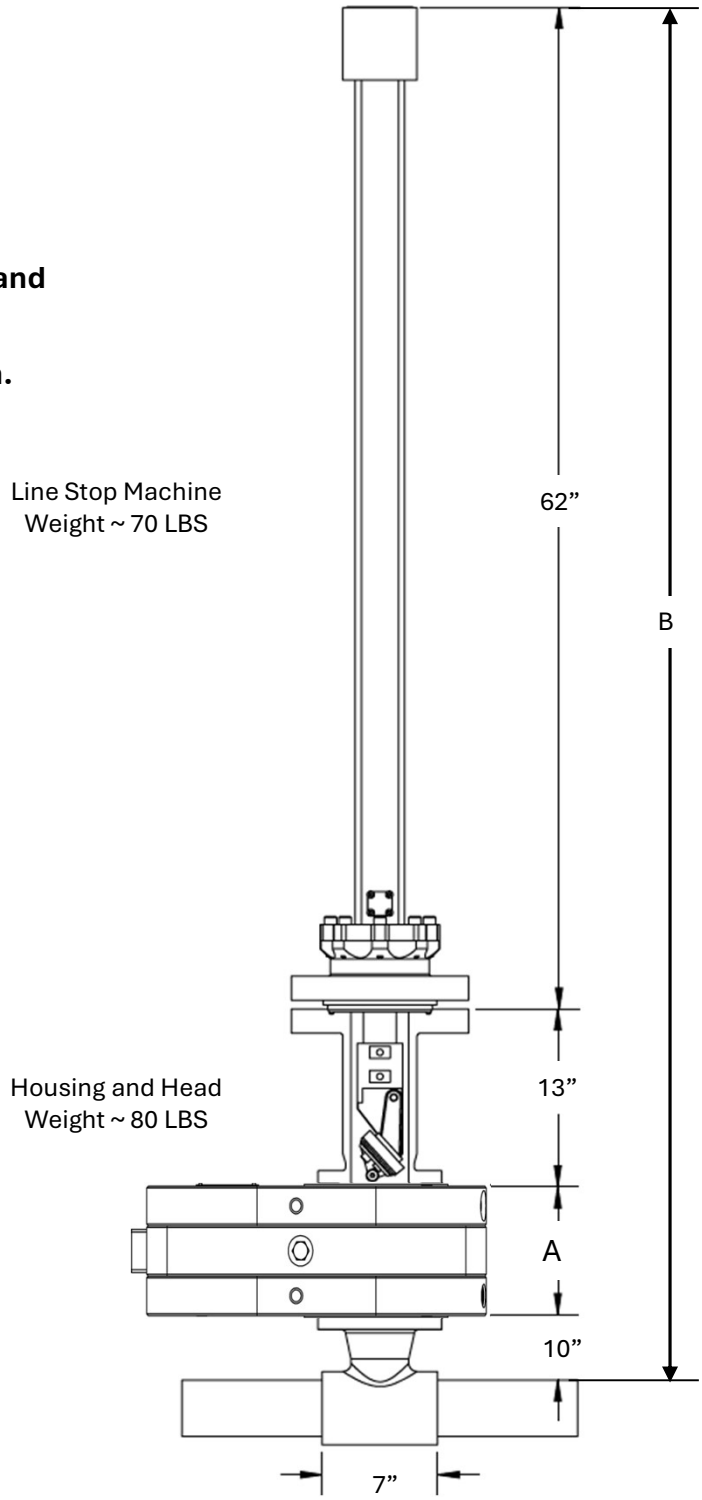

Valve Type	A	B	Weight
Sandwich Type	13”	98”	200#
M&J	15.5”	100.5”	530#

3” 600# Line Stop 48” Jackscrew

NOTE: EQUIPMENT AVAILABILITY MUST BE VERIFIED BEFORE THE START OF THE JOB.
NOTE: ALL WEIGHTS AND DIMENSIONS ARE BASED ON AVAILABLE DATA AND SUBJECT TO CHANGE.

All dimensions are for plant series fittings.

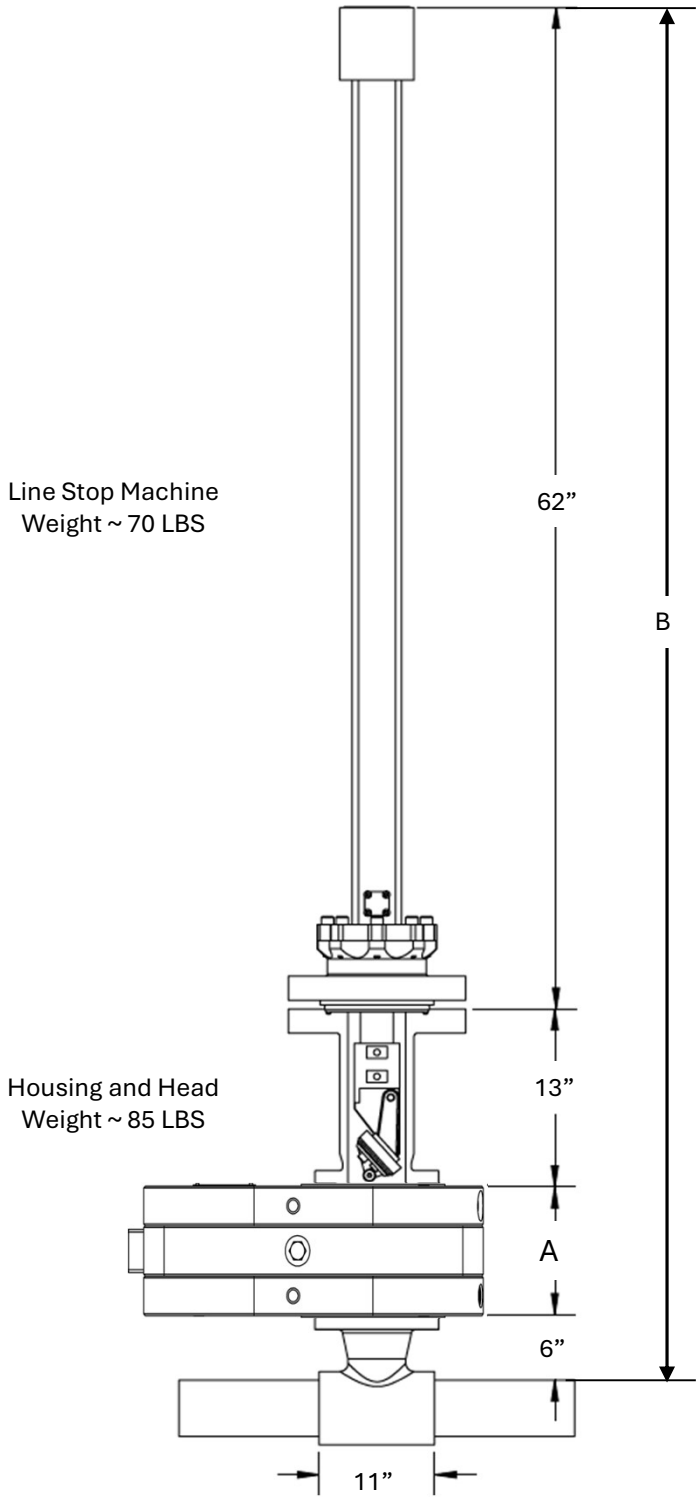

Valve Type	A	B	Weight
Sandwich Type	5”	114.75”	200#
M&J	7.5”	117.25“	530#

4” 600# Line Stop 48” Jackscrew

NOTE: EQUIPMENT AVAILABILITY MUST BE VERIFIED BEFORE THE START OF THE JOB.
NOTE: ALL WEIGHTS AND DIMENSIONS ARE BASED ON AVAILABLE DATA AND SUBJECT TO CHANGE.

All dimensions are for plant series fittings.

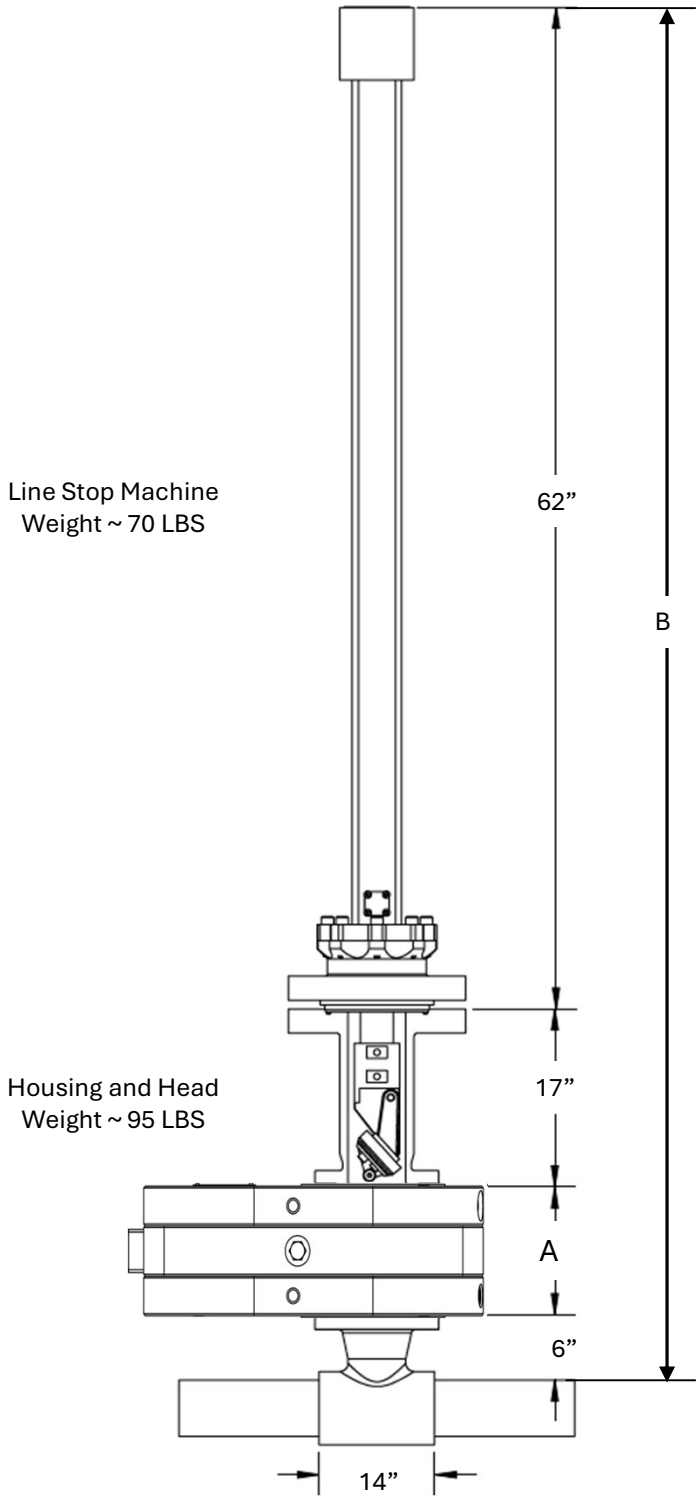

Valve Type	A	B	Weight
Sandwich Type	6.5”	91.5”	450#
M&J	7.5”	92.5“	915#

6” 600# Line Stop 48” Jackscrew

NOTE: EQUIPMENT AVAILABILITY MUST BE VERIFIED BEFORE THE START OF THE JOB.
NOTE: ALL WEIGHTS AND DIMENSIONS ARE BASED ON AVAILABLE DATA AND SUBJECT TO CHANGE.

All dimensions are for plant series fittings.

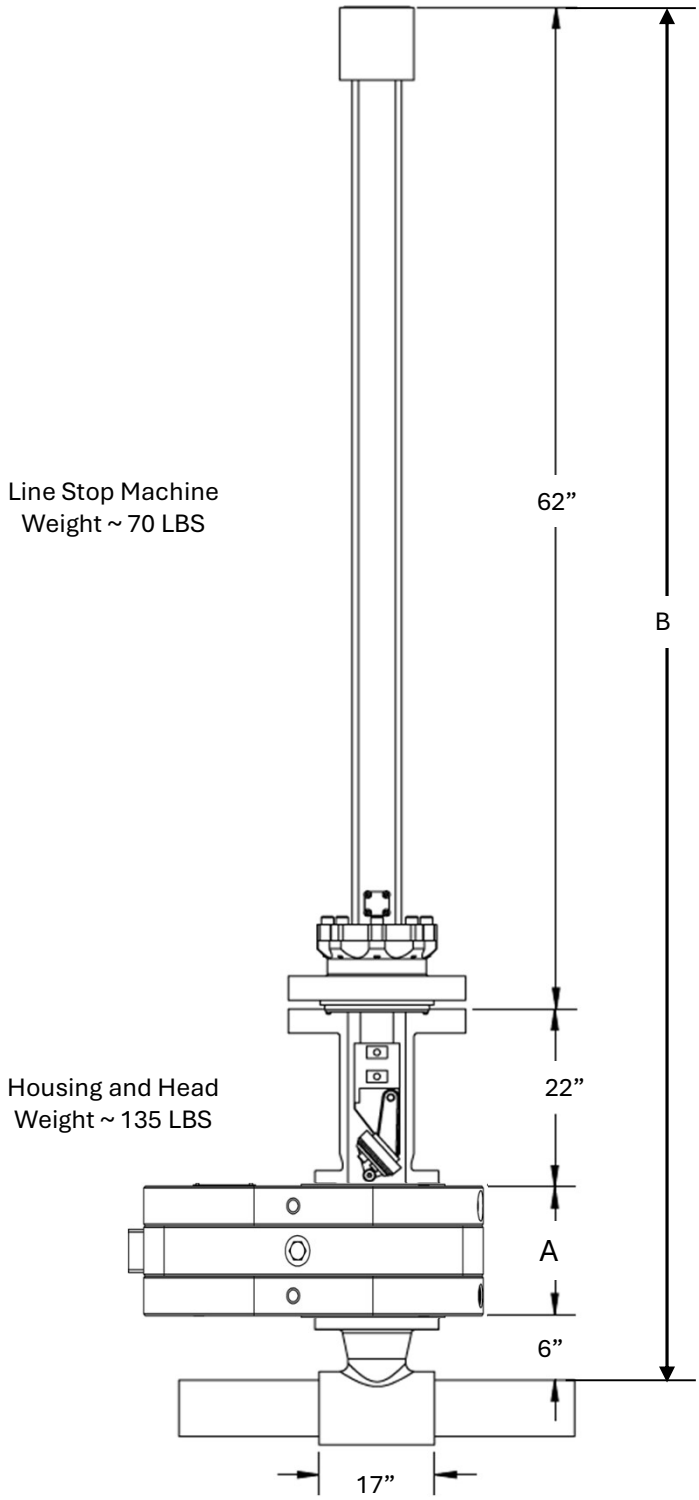

Valve Type	A	B	Weight
Sandwich Type	7.125”	97.125”	207#
M&J	8.5”	98.5“	1120#

8” 600# Line Stop 48” Jackscrew

NOTE: EQUIPMENT AVAILABILITY MUST BE VERIFIED BEFORE THE START OF THE JOB.
NOTE: ALL WEIGHTS AND DIMENSIONS ARE BASED ON AVAILABLE DATA AND SUBJECT TO CHANGE.

All dimensions are for plant series fittings.

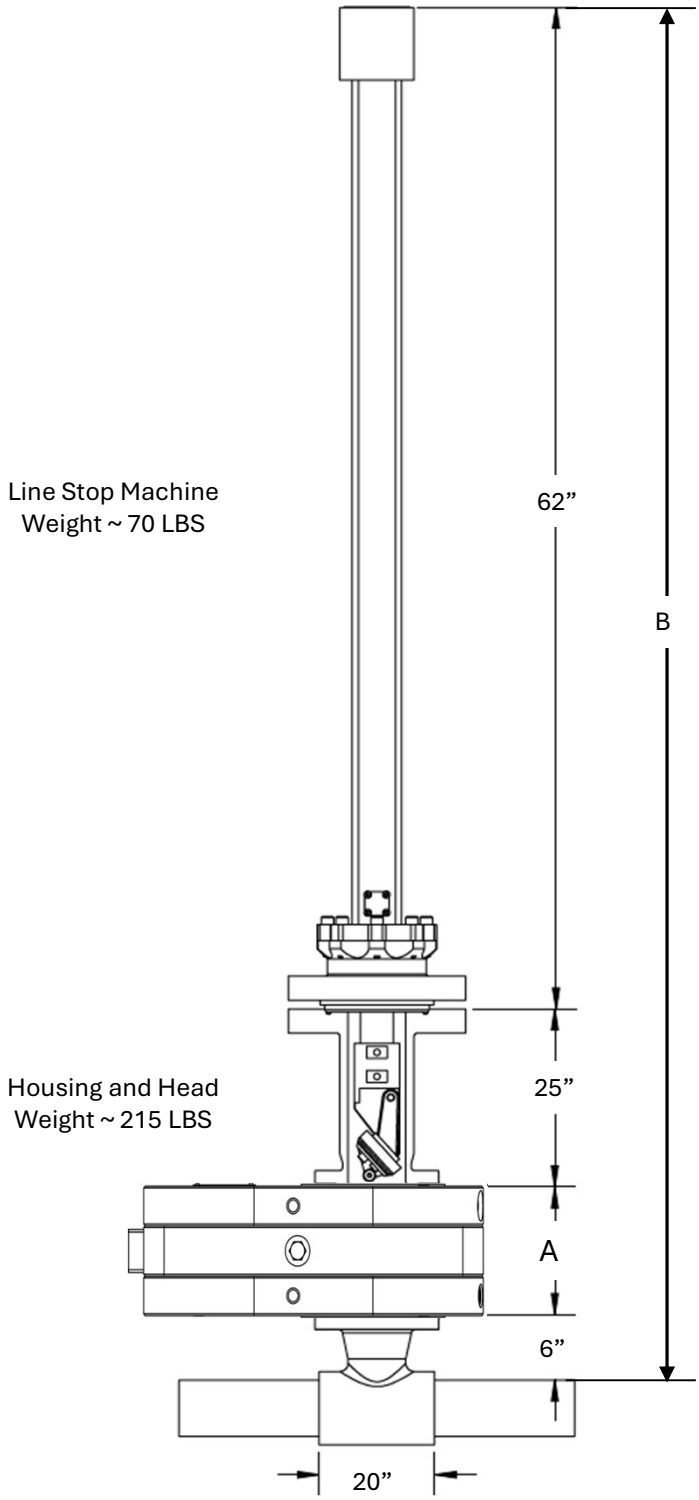

Valve Type	A	B	Weight
Sandwich Type	8”	101”	1400#
M&J	8.5”	101.5“	1600#

10” 600# Line Stop 48” Jackscrew

NOTE: EQUIPMENT AVAILABILITY MUST BE VERIFIED BEFORE THE START OF THE JOB.
NOTE: ALL WEIGHTS AND DIMENSIONS ARE BASED ON AVAILABLE DATA AND SUBJECT TO CHANGE.

All dimensions are for plant series fittings.

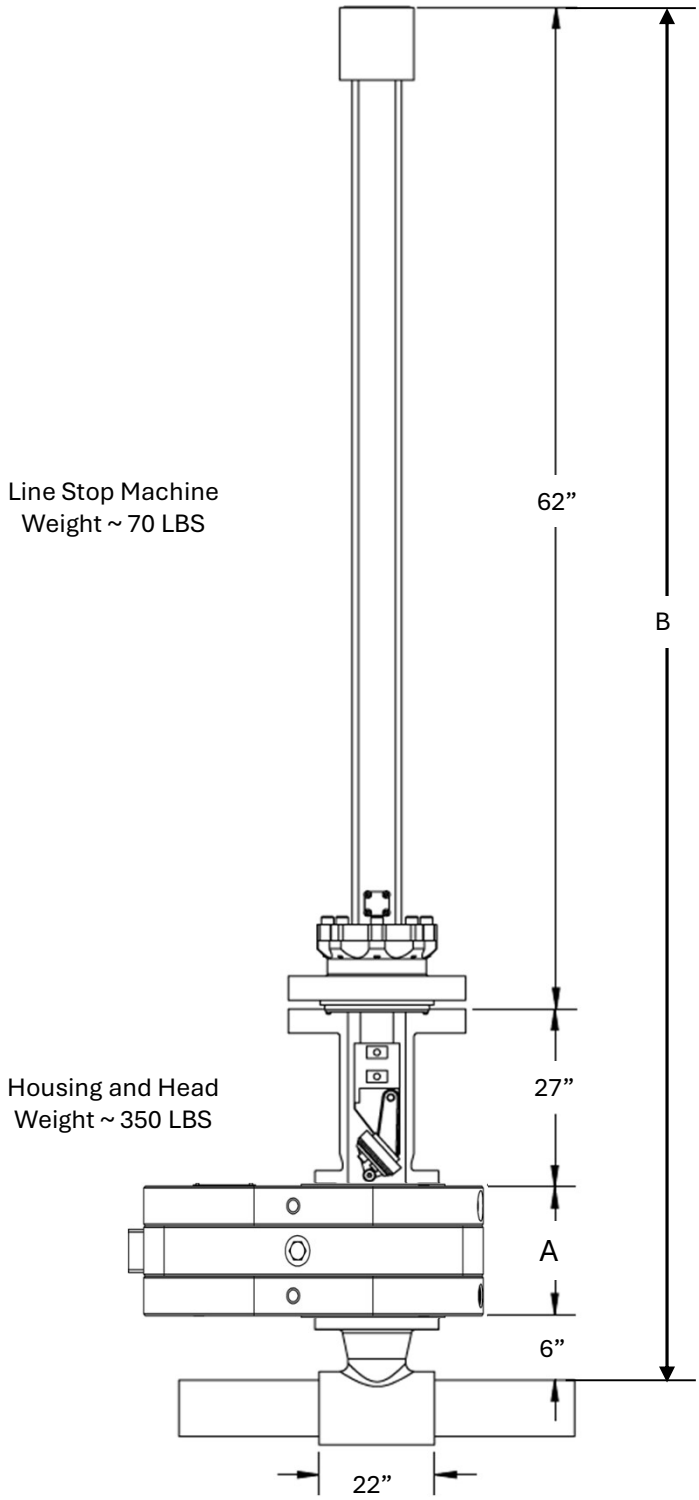

Valve Type	A	B	Weight
Sandwich Type	10”	105”	1900#
M&J	8.5”	103.5“	2050#

12” 600# Line Stop 48” Jackscrew

NOTE: EQUIPMENT AVAILABILITY MUST BE VERIFIED BEFORE THE START OF THE JOB.
NOTE: ALL WEIGHTS AND DIMENSIONS ARE BASED ON AVAILABLE DATA AND SUBJECT TO CHANGE.

All dimensions are for plant series fittings.

This stack utilizes 4” line stop equipment and a 3” 600# x 4” 600# spool below the valve. The A dimension includes the spool length.

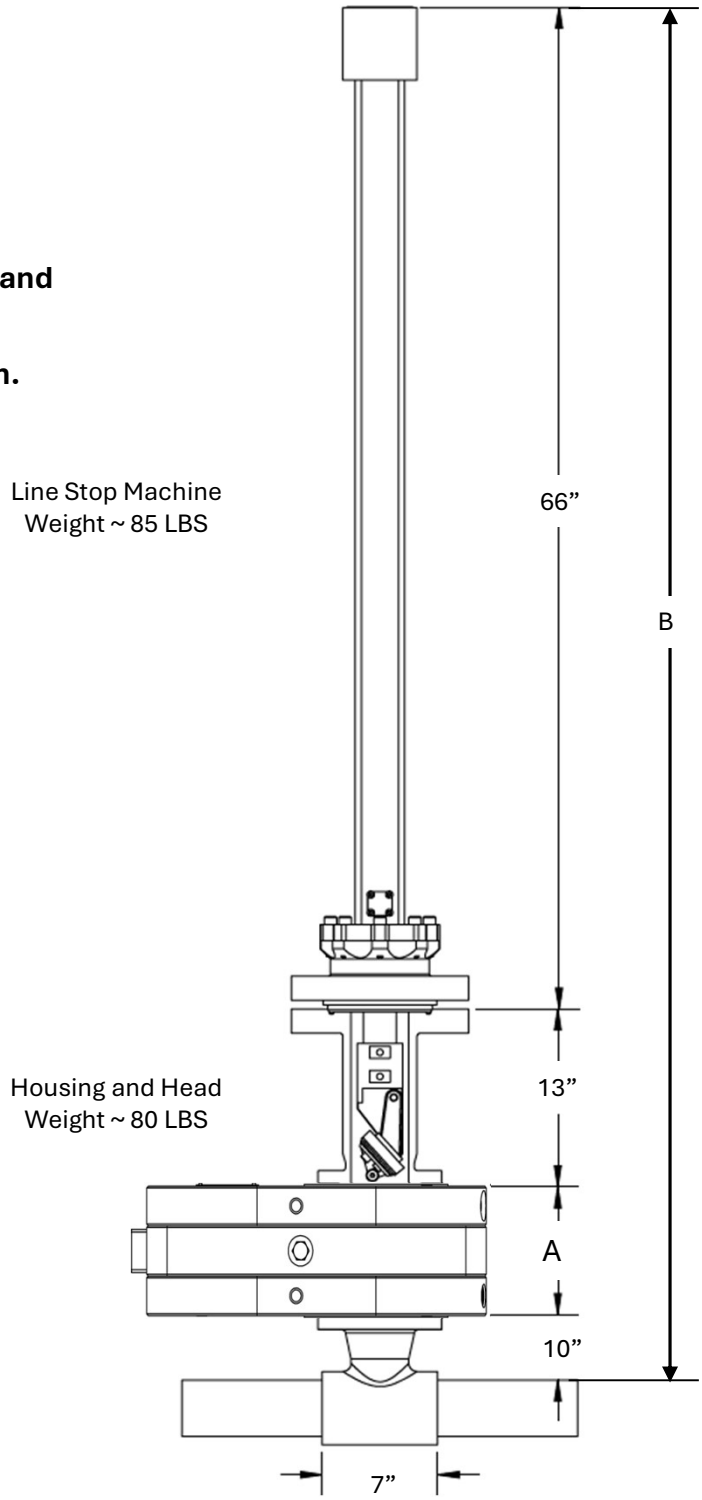

Valve Type	A	B	Weight
Sandwich Type	13”	102”	200#
M&J	15.5”	104.5”	530#

3” 600# Line Stop 52” Jackscrew

NOTE: EQUIPMENT AVAILABILITY MUST BE VERIFIED BEFORE THE START OF THE JOB.
NOTE: ALL WEIGHTS AND DIMENSIONS ARE BASED ON AVAILABLE DATA AND SUBJECT TO CHANGE.

All dimensions are for plant series fittings.

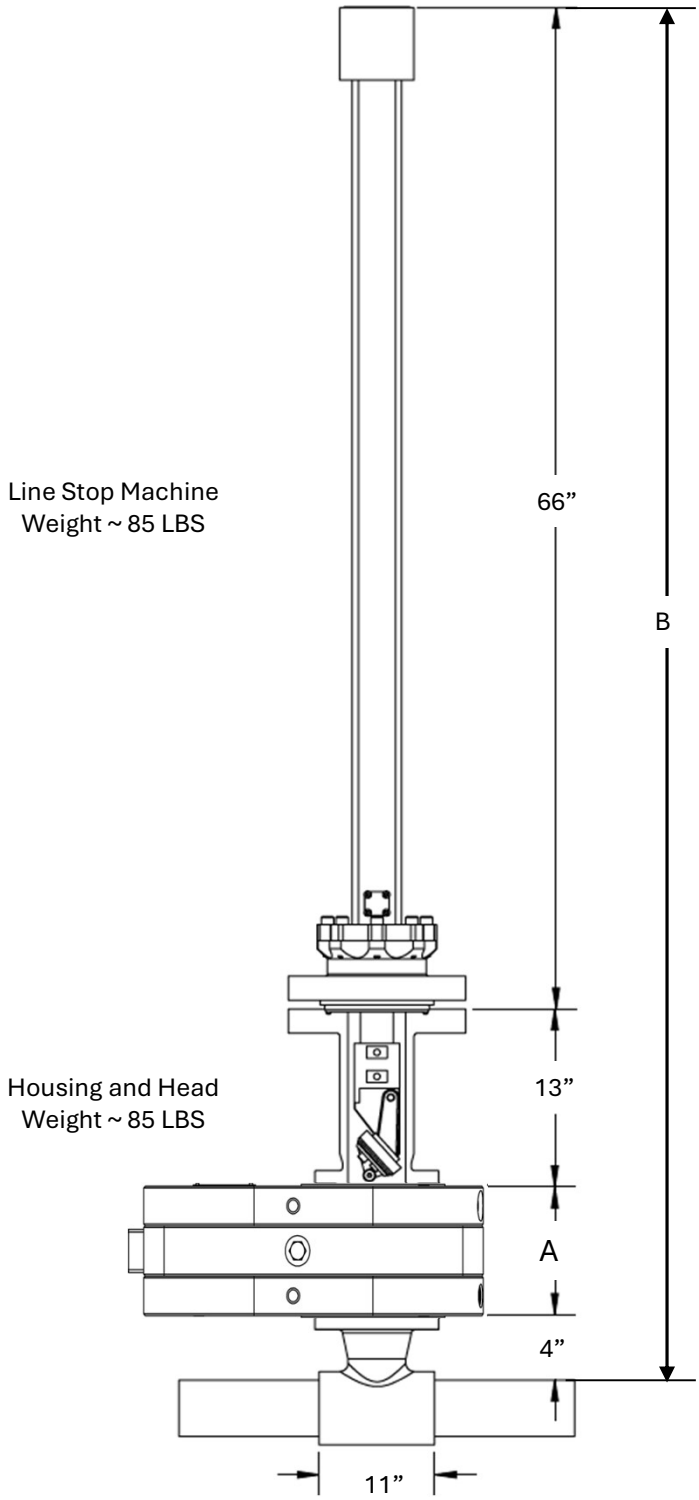

Valve Type	A	B	Weight
Sandwich Type	5”	88”	200#
M&J	7.5”	90.5“	530#

4” 600# Line Stop 52” Jackscrew

NOTE: EQUIPMENT AVAILABILITY MUST BE VERIFIED BEFORE THE START OF THE JOB.
NOTE: ALL WEIGHTS AND DIMENSIONS ARE BASED ON AVAILABLE DATA AND SUBJECT TO CHANGE.

All dimensions are for plant series fittings.

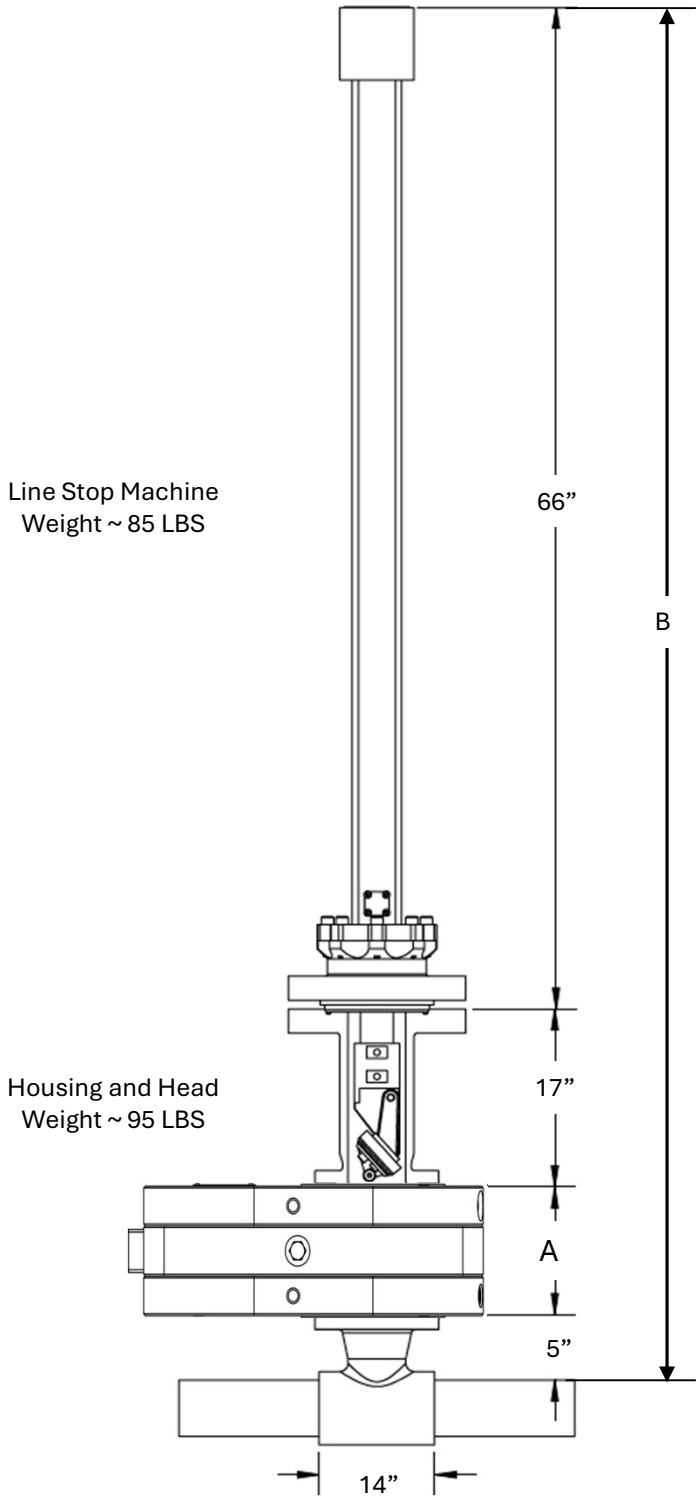

Valve Type	A	B	Weight
Sandwich Type	6.5”	94.5”	450#
M&J	7.5”	95.5“	915#

6” 600# Line Stop 52” Jackscrew

NOTE: EQUIPMENT AVAILABILITY MUST BE VERIFIED BEFORE THE START OF THE JOB.
NOTE: ALL WEIGHTS AND DIMENSIONS ARE BASED ON AVAILABLE DATA AND SUBJECT TO CHANGE.

All dimensions are for plant series fittings.

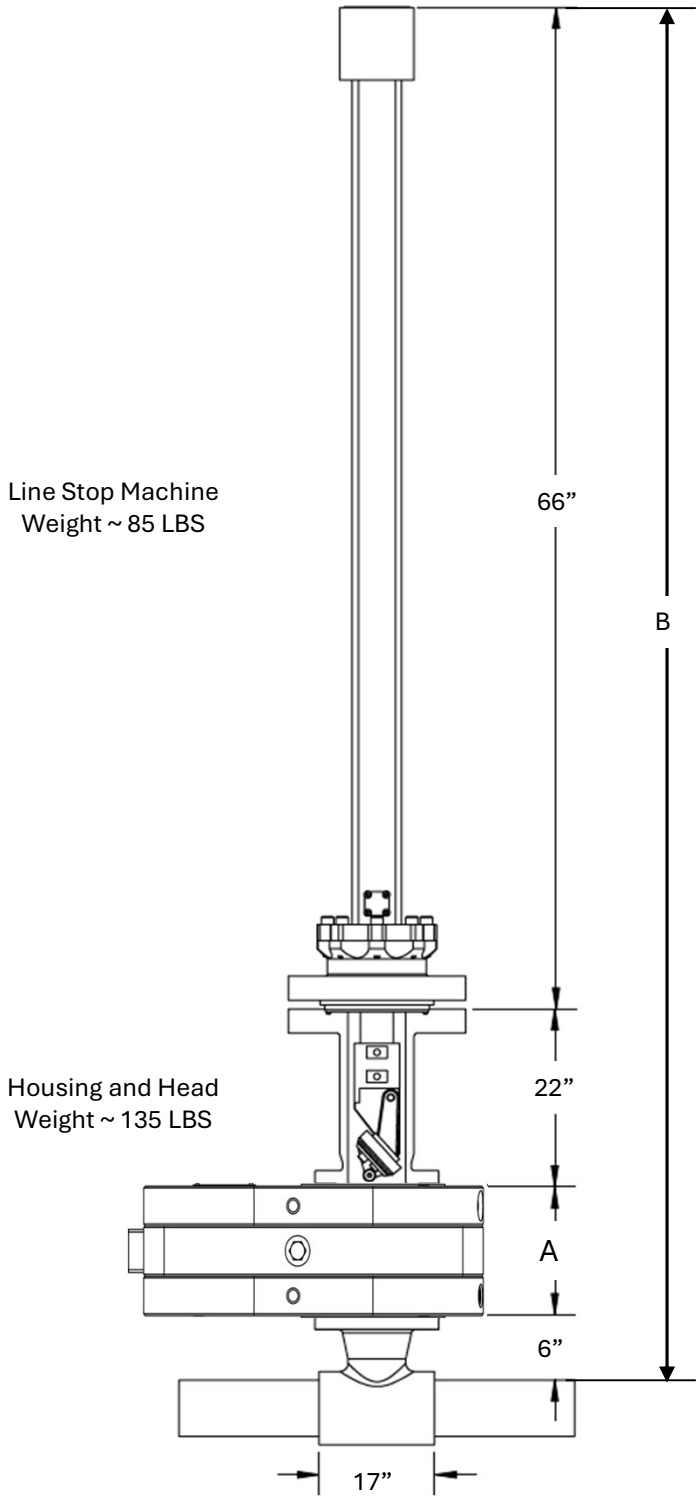

Valve Type	A	B	Weight
Sandwich Type	7.125”	81.125”	207#
M&J	8.5”	82.5“	1120#

8” 600# Line Stop 52” Jackscrew

NOTE: EQUIPMENT AVAILABILITY MUST BE VERIFIED BEFORE THE START OF THE JOB.
NOTE: ALL WEIGHTS AND DIMENSIONS ARE BASED ON AVAILABLE DATA AND SUBJECT TO CHANGE.

All dimensions are for plant series fittings.

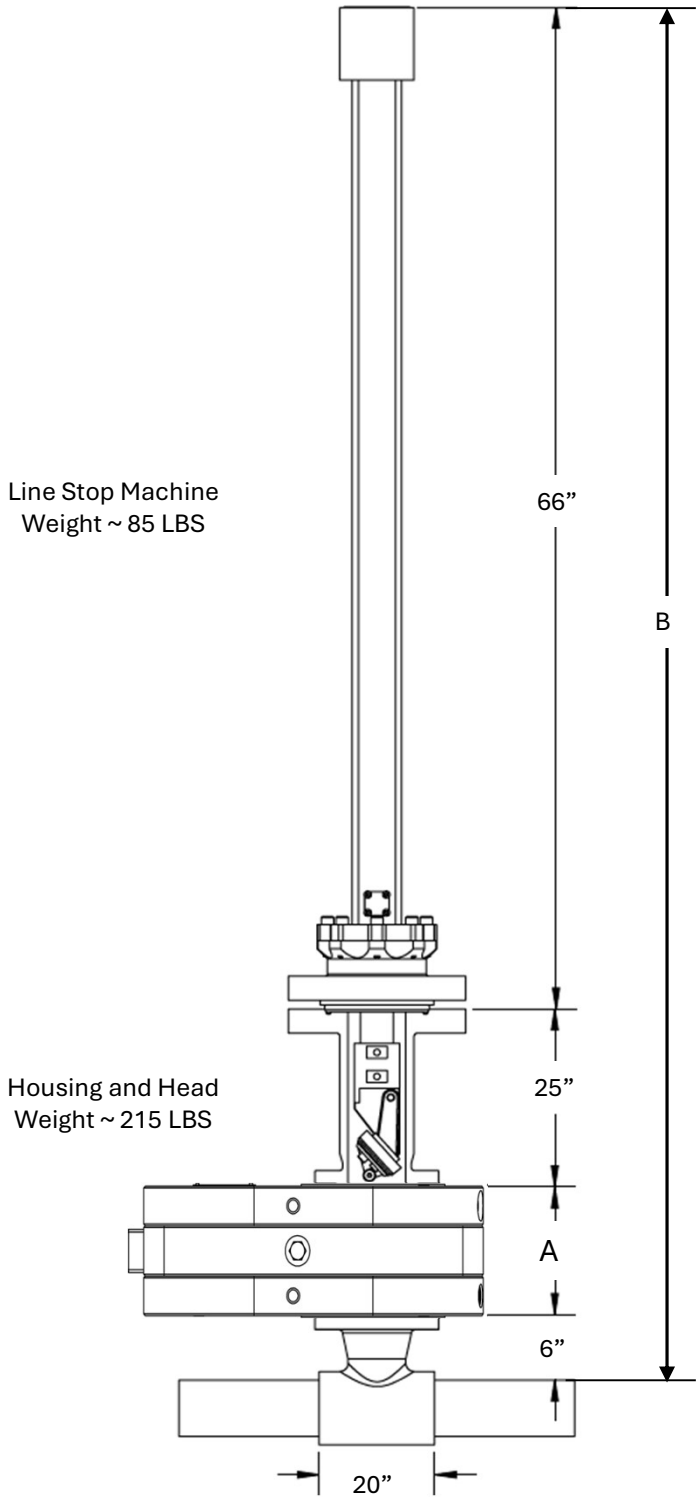

Valve Type	A	B	Weight
Sandwich Type	8”	105”	1400#
M&J	8.5”	105.5“	1600#

10” 600# Line Stop 52” Jackscrew

NOTE: EQUIPMENT AVAILABILITY MUST BE VERIFIED BEFORE THE START OF THE JOB.
NOTE: ALL WEIGHTS AND DIMENSIONS ARE BASED ON AVAILABLE DATA AND SUBJECT TO CHANGE.

All dimensions are for plant series fittings.

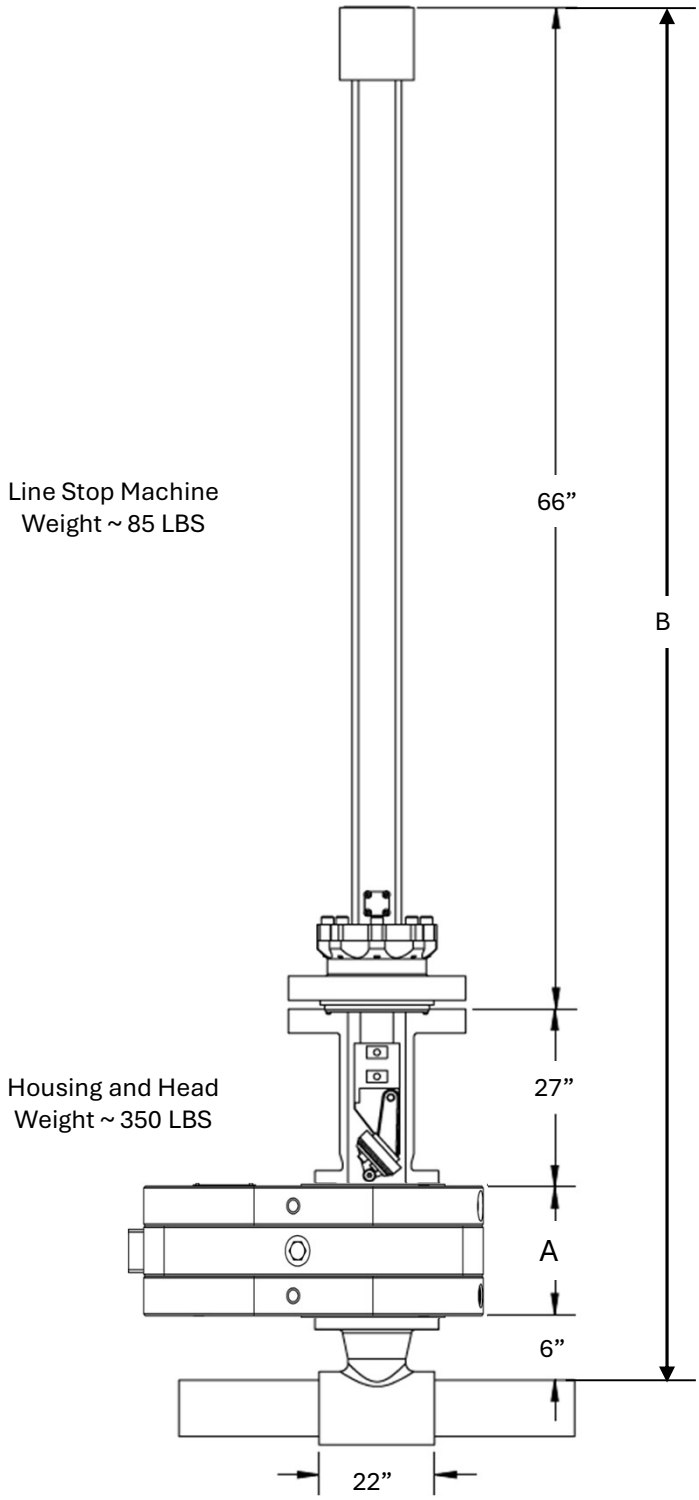

Valve Type	A	B	Weight
Sandwich Type	10”	109”	1900#
M&J	8.5”	107.5“	2050#

12” 600# Line Stop 52” Jackscrew

NOTE: EQUIPMENT AVAILABILITY MUST BE VERIFIED BEFORE THE START OF THE JOB.
NOTE: ALL WEIGHTS AND DIMENSIONS ARE BASED ON AVAILABLE DATA AND SUBJECT TO CHANGE.

All dimensions are for plant series fittings.

This stack utilizes 4” line stop equipment and a 3” 600# x 4” 600# spool below the valve. The A dimension includes the spool length.

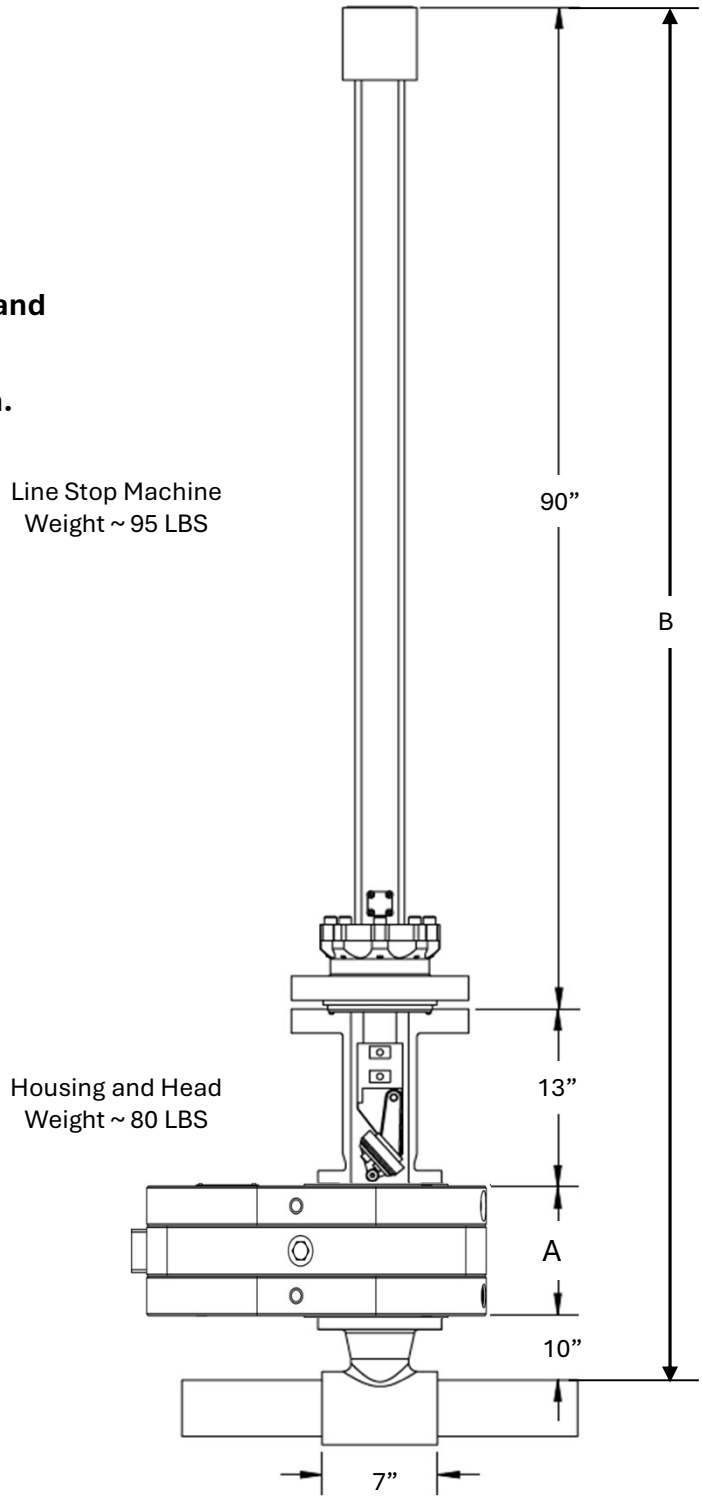

Valve Type	A	B	Weight
Sandwich Type	13”	126”	200#
M&J	15.5”	128.5”	530#

3” 600# Line Stop 72” Jackscrew

NOTE: EQUIPMENT AVAILABILITY MUST BE VERIFIED BEFORE THE START OF THE JOB.
NOTE: ALL WEIGHTS AND DIMENSIONS ARE BASED ON AVAILABLE DATA AND SUBJECT TO CHANGE.

All dimensions are for plant series fittings.

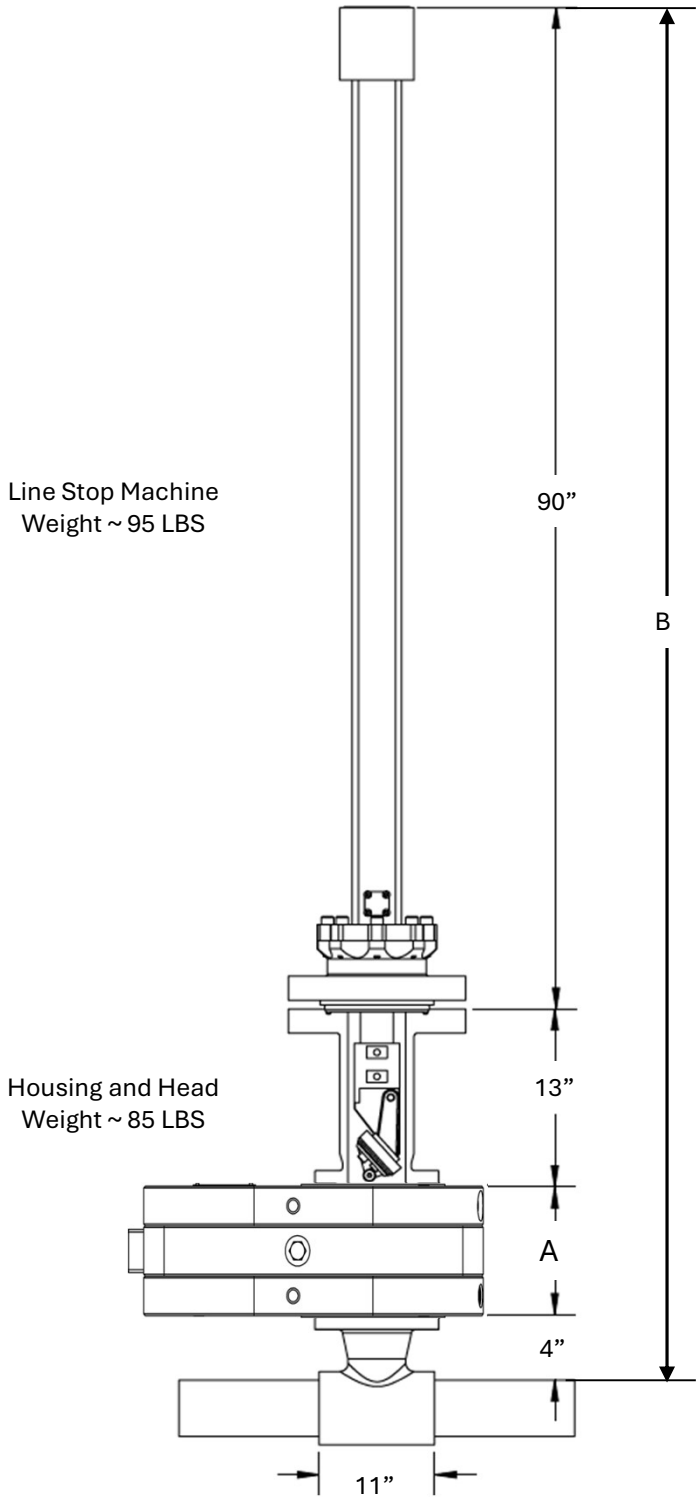

Valve Type	A	B	Weight
Sandwich Type	5”	112”	200#
M&J	7.5”	114.5“	530#

4” 600# Line Stop 72” Jackscrew

NOTE: EQUIPMENT AVAILABILITY MUST BE VERIFIED BEFORE THE START OF THE JOB.
NOTE: ALL WEIGHTS AND DIMENSIONS ARE BASED ON AVAILABLE DATA AND SUBJECT TO CHANGE.

All dimensions are for plant series fittings.

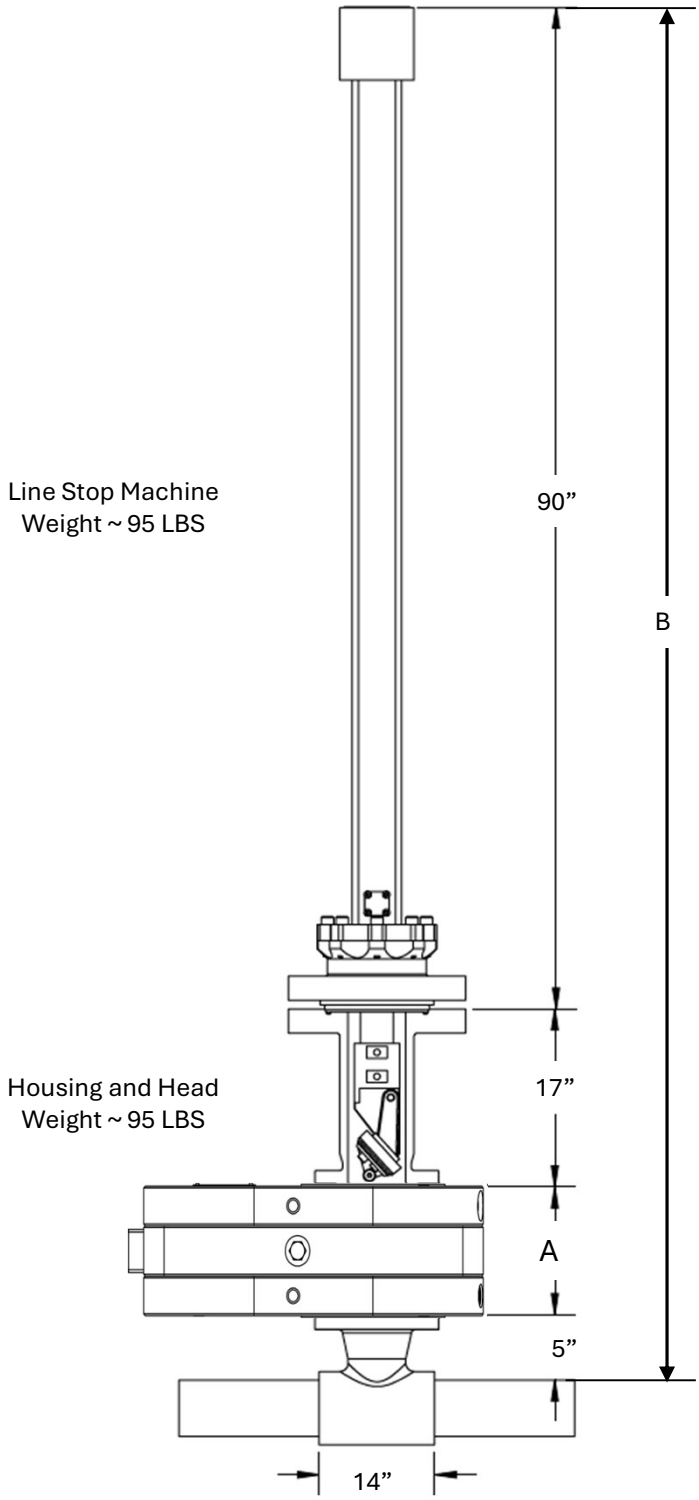

Valve Type	A	B	Weight
Sandwich Type	6.5”	118.5”	450#
M&J	7.5”	119.5“	915#

6” 600# Line Stop 72” Jackscrew

NOTE: EQUIPMENT AVAILABILITY MUST BE VERIFIED BEFORE THE START OF THE JOB.
NOTE: ALL WEIGHTS AND DIMENSIONS ARE BASED ON AVAILABLE DATA AND SUBJECT TO CHANGE.

All dimensions are for plant series fittings.

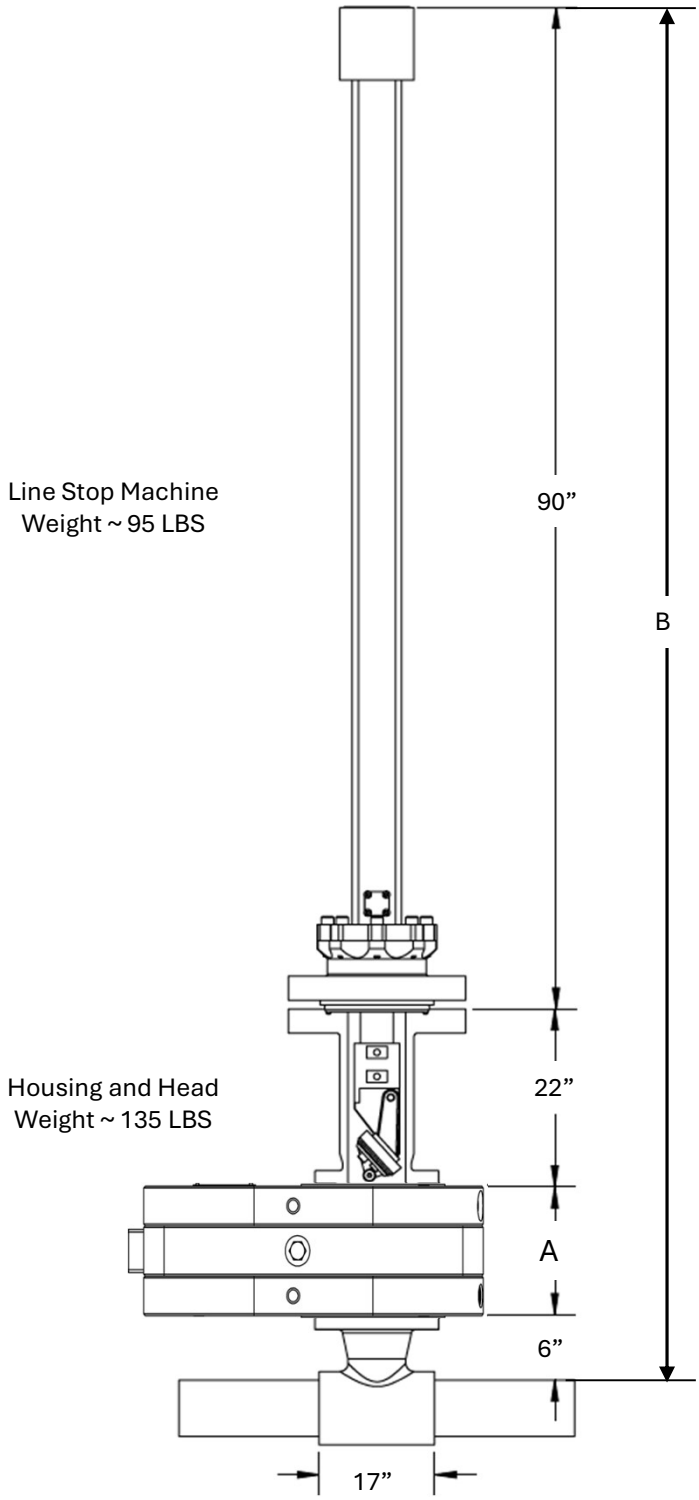

Valve Type	A	B	Weight
Sandwich Type	7.125”	125.125”	207#
M&J	8.5”	126.5“	1120#

8” 600# Line Stop 72” Jackscrew

NOTE: EQUIPMENT AVAILABILITY MUST BE VERIFIED BEFORE THE START OF THE JOB.
NOTE: ALL WEIGHTS AND DIMENSIONS ARE BASED ON AVAILABLE DATA AND SUBJECT TO CHANGE.

All dimensions are for plant series fittings.

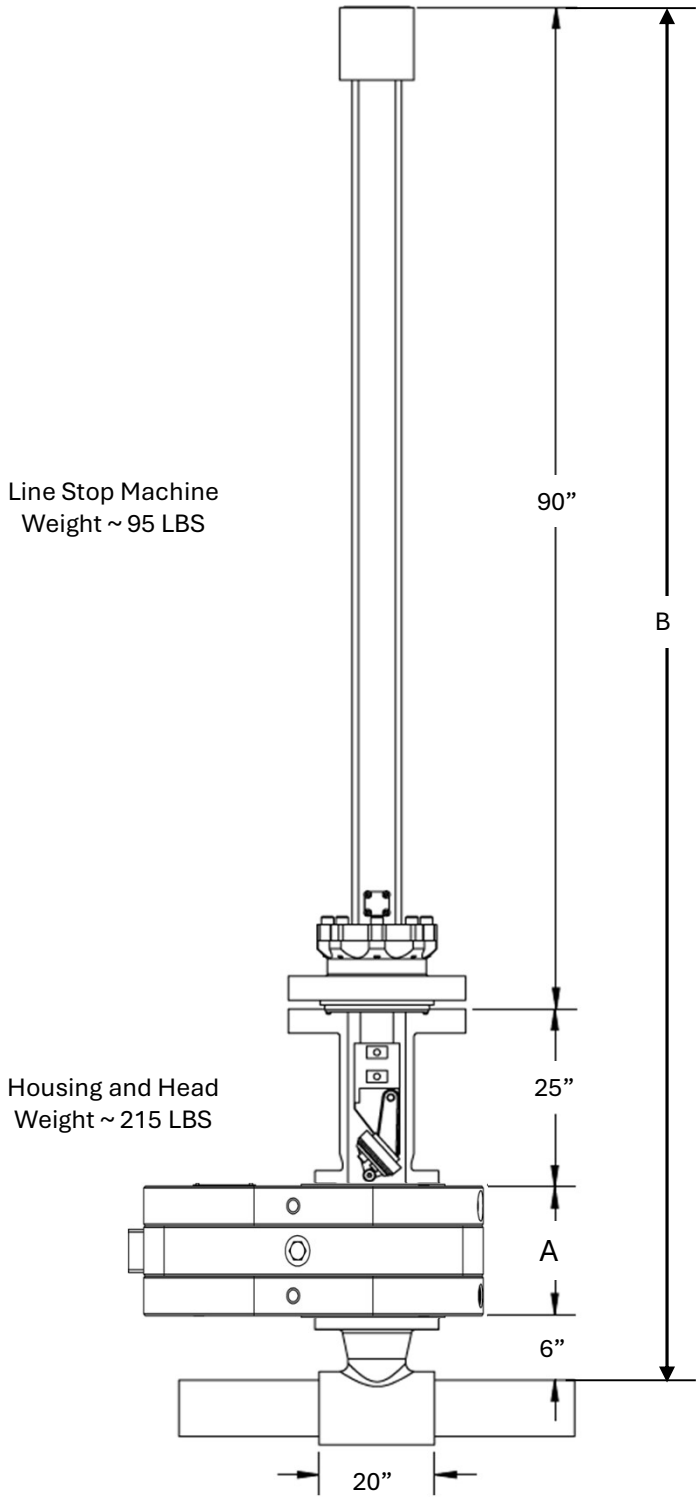

Valve Type	A	B	Weight
Sandwich Type	8”	129”	1400#
M&J	8.5”	129.5“	1600#

10” 600# Line Stop 72” Jackscrew

NOTE: EQUIPMENT AVAILABILITY MUST BE VERIFIED BEFORE THE START OF THE JOB.
NOTE: ALL WEIGHTS AND DIMENSIONS ARE BASED ON AVAILABLE DATA AND SUBJECT TO CHANGE.

All dimensions are for plant series fittings.

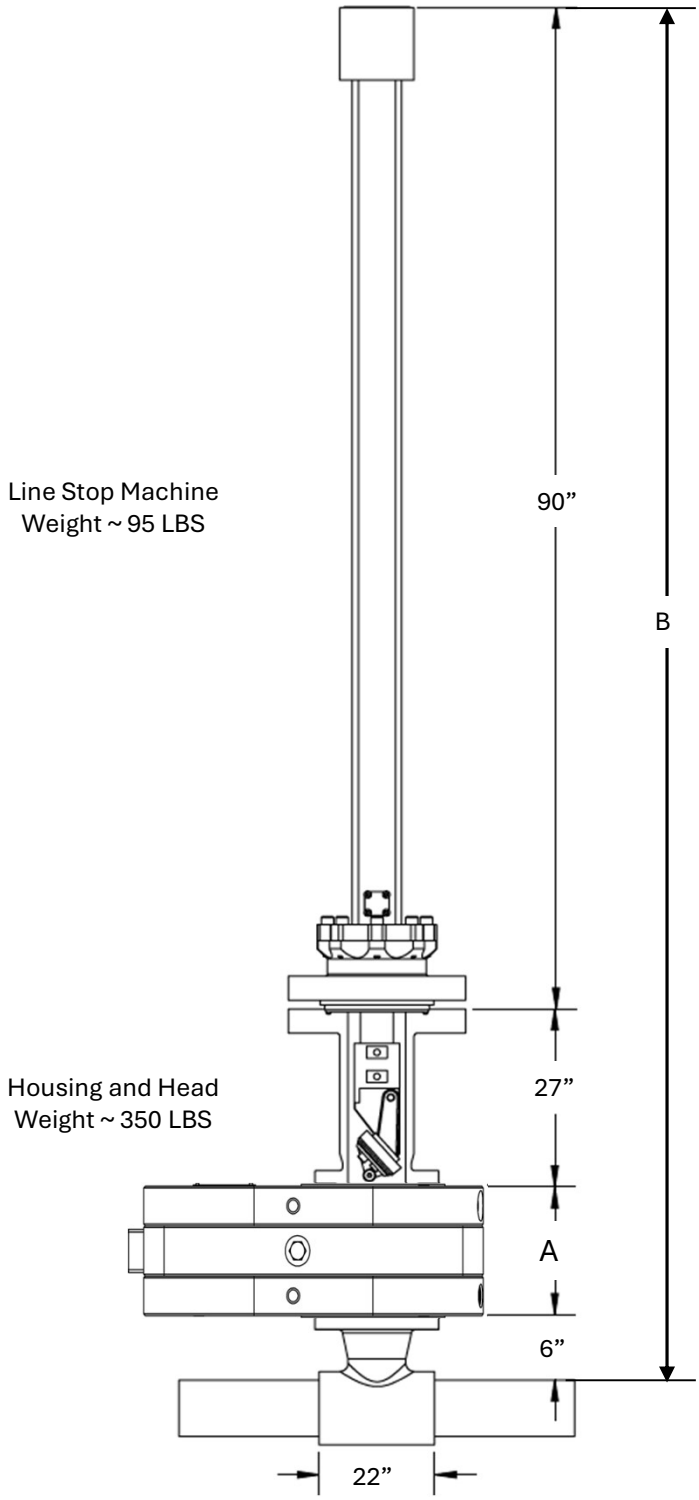

Valve Type	A	B	Weight
Sandwich Type	10”	133”	1900#
M&J	8.5”	131.5“	2050#

12” 600# Line Stop 72” Jackscrew